SEW EURODRIVE

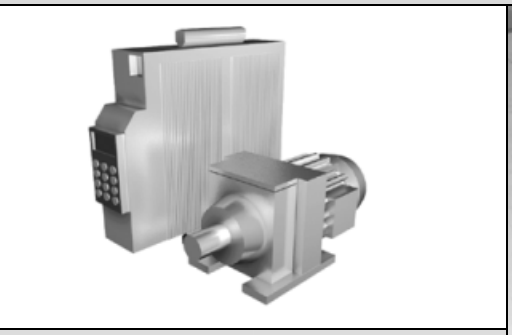

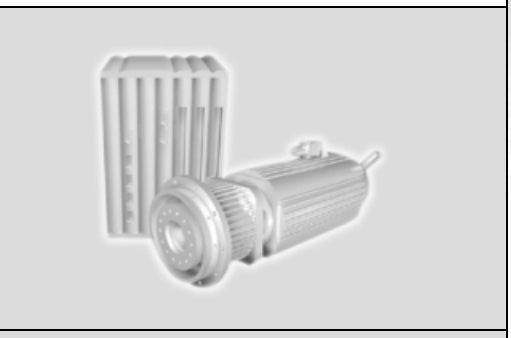

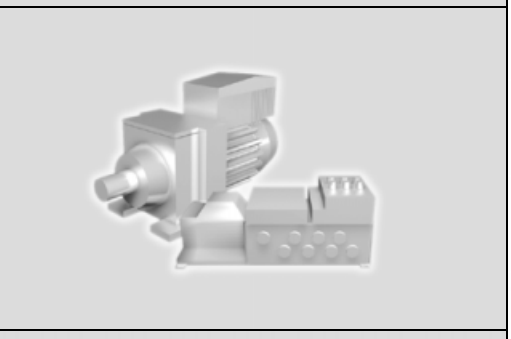

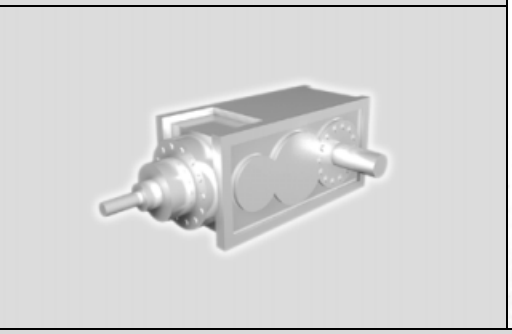

MOVITRAC® B

Edition 04/2007

11643811 / EN

System Manual

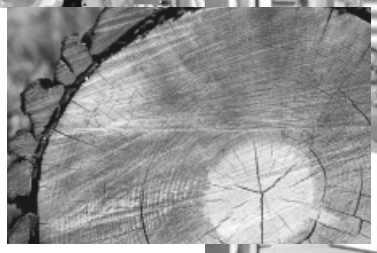

SEW EURODRIVE

1 Important Notes 6
1.1 Structure of the safety notes 6
1.2 Right to claim under warranty 6
1.3 Exclusion of liability 6

2 Safety Notes 7
2.1 General information 7
2.2 Target group 7
2.3 Proper use 7
2.4 Transportation, storage 8
2.5 Installation 8
2.6 Electrical connection 8
2.7 Safe disconnection 9
2.8 Operation 9

3 System Description MOVITRAC® B 10
3.1 MOVITRAC® B – compact, versatile and universal 10
3.2 MOVITRAC® B system overview 11
3.3 The units at a glance 12
3.4 Functions / features 13
3.5 MOVITOOLS® MotionStudio 16

4 Technical Data 17
4.1 CE marking, UL approval and C-Tick 17
4.2 General technical data 18
4.3 MOVITRAC® B electronics data 19
4.4 MOVITRAC® B technical data 20
4.5 FBG11B keypad front option 39
4.6 FSC11B communication module 40
4.7 FIO11B analog module 41
4.8 DBG60B keypad (in preparation) 42
4.9 Parameter module UBP11A 45
4.10 MBG11A setpoint control module 45
4.11 UWS11A Interface adapter RS-232 / RS-485 for support rail 47
4.12 UWS21B RS-232/RS-485 interface adapter 48
4.13 USB11A USB/RS-485 interface adapter 49
4.14 Braking resistors, BW Series 50
4.15 Touch guard BS 57
4.16 Submounting of FKB flat-design resistors 58
4.17 FHS support rail mounting 59
4.18 ND line chokes 60
4.19 NF line filter 62
4.20 ULF11A foldable ferrites 64
4.21 HD series output chokes 65
4.22 FKE EMC-module 67
4.23 HF output filter 68
4.24 Fieldbus connection 72
4.25 MOVI-PLC® 78
4.26 UWU52A switched-mode power supply 80

5 Parameters ... 81
5.1 Explanation of the parameters ... 81

6 Project Planning ... 105
6.1 Schematic sequence ... 105
6.2 Options for standard applications ... 106
6.3 Description of applications ... 107
6.4 Speed-torque characteristics ... 108
6.5 Motor selection ... 109
6.6 Overload capacity ... 111
6.7 Load capacity of the units at low output frequencies ... 112
6.8 Selecting the braking resistor ... 113
6.9 Connecting AC brake motors ... 118
6.10 Mains and the motor connection ... 119
6.11 Multi-motor drive / group drive ... 125
6.12 Line chokes ... 126
6.13 Electromagnetic compatibility (EMC) ... 128
6.14 HF… output filter type ... 130
6.15 Electronics cables and signal generation ... 133
6.16 External voltage supply DC 24 V ... 134
6.17 Parameter set switchover ... 135
6.18 Priority of the operating statuses and interrelation between control signals ... 135
6.19 PI controller ... 137
6.20 Application examples ... 140

7 Unit Design ... 144
7.1 Sizes 0XS / 0S / 0L ... 144
7.2 Sizes 1 / 2S / 2 ... 145
7.3 Size 3 ... 146
7.4 Sizes 4 / 5 ... 147
7.5 Unit designation / Nameplate ... 148

8 Installation ... 149
8.1 Installation notes ... 149
8.2 Installation of the optional power components ... 151
8.3 UL compliant installation ... 155
8.4 Scope of delivery and installation of loose items ... 156
8.5 Cold plate installation ... 161
8.6 Deactivating EMC capacitors (size 0 only) ... 161
8.7 Wiring diagram 230 V 0.25 … 2.2 kW (0.34 ... 3.0 HP) / 400 V 0.25 … 4.0 kW (0.34 ... 5.4 HP) ... 163
8.8 Wiring diagram 230 V 3.7 … 30 kW (5.0 ... 40 HP) / 400 V 5.5 … 75 kW (7.4 ... 100 HP) ... 164
8.9 TF thermistor and TH bimetallic switch ... 165
8.10 Connection braking resistor BW.. / BW..-T ... 165
8.11 Connection of the brake rectifier ... 166
8.12 FSC11B/FIO11B installation ... 166
8.13 MBG11A setpoint control module installation ... 172

9 Startup 173
9.1 Startup: Brief Description 173
9.2 General startup instructions 174
9.3 Preliminary work and resources basic unit 174
9.4 Preliminary work and resources for MOVITRAC® B with keypad 175
9.5 Optional FBG11B keypad 176
9.6 Basic operation of the FBG11B keypad 177
9.7 FBG11B setpoint control module and external setpoint specification 179
9.8 Startup with the FBG11B keypad 181
9.9 Startup with DBG60B 184
9.10 Startup with PC and MOVITOOLS® MotionStudio 189
9.11 Startup for MBG11A setpoint control module 189
9.12 Starting the motor 191
9.13 Parameter list 196

10 Operation 205
10.1 Data backup 205
10.2 Return codes (r-19 ... r-38) 206
10.3 Status displays 207
10.4 Unit status codes 208
10.5 Extended storage 209
10.6 DBG60B keypad 209

11 Service / List of Faults 215
11.1 Device information 215
11.2 Error list (F-00 ... F-113) 217
11.3 SEW electronics service 219

Index 220

1 Important Notes

1.1 Structure of the safety notes

The safety notes in these operating instructions are structured as follows:

Symbol	SIGNAL WORD
	Nature and source of hazard Possible consequence(s) if disregarded. • Measure(s) to avoid the hazard.

Symbol	Signal word	Meaning	Consequences if disregarded
Example: General hazard	HAZARD	Imminent danger	Severe or fatal injuries
	WARNING	Possible dangerous situation	Severe or fatal injuries
 Electric shock	CAUTION	Possible dangerous situation	Minor injuries
	STOP	Possible damage to property	Damage to the drive system or its environment
	NOTE	Useful information or tip Simplifies the operation of the drive system	

1.2 Right to claim under warranty

You must observe the information in the operating instructions to ensure trouble-free operation and for the fulfillment of any rights to claim under the limited warranty. Read the operating instructions before you start working with the unit.

Make sure that the operating instructions are available to persons responsible for the system and its operation, as well as to persons who work independently on the unit.

1.3 Exclusion of liability

You must comply with the information contained in these operating instructions to ensure safe operation of frequency inverters and to achieve the specified product characteristics and performance requirements. SEW-EURODRIVE assumes no liability for injury to persons or damage to equipment or property resulting from non-observance of these operating instructions. In such cases, any liability for defects is excluded.

2 Safety Notes

The following basic safety notes are intended to avoid injury to persons and damage to property. The operator must make sure that the basic safety notes are read and observed. Make sure that persons responsible for the plant and its operation, as well as persons who work independently on the unit, have read through the operating instructions carefully and understood them. If you are unclear about any of the information in this documentation, or if you require further information, please contact SEW-EURODRIVE.

2.1 General information

Never install or operate damaged products. In the event of damage, submit a complaint to the shipping company immediately.

During operation, drives with this type of enclosure may have live, uninsinuated, and sometimes moving or rotating parts as well as hot surfaces.

Removing covers without authorization, improper use as well as incorrect installation or operation may result in severe injuries to persons or damage to property.

Consult the documentation for additional information.

2.2 Target group

Only qualified personnel are authorized to transport, install, startup or service the units (observe IEC 60364 or CENELEC HD 384 or DIN VDE 0100 and IEC 60664 or DIN VDE 0110 as well as national accident prevention guidelines).

Qualified personnel in the context of these basic safety notes are persons familiar with installation, assembly, startup and operation of the product who possess the necessary qualifications.

All work in further areas of transportation, storage, operation and waste disposal must be carried out by persons who are trained appropriately.

2.3 Proper use

Frequency inverters are components intended for installation in electrical systems or machines.

In case of installation in machines, startup of the drive inverters (meaning the start of proper use) is prohibited until it is determined that the machine meets the requirements stipulated in the EC Directive 98/37/EC (machine directive); observe EN 60204.

Startup (i.e. the start of proper use) is only permitted under observance of the EMC (89/336/EEC) directive.

The frequency inverters comply with the requirements of the Low Voltage Directive 2006/95/EC. The harmonized standards of the EN 61800-5-1/DIN VDE T105 series in connection with EN 60439-1/VDE 0660 part 500 and EN 60146/VDE 0558 are applied to these frequency inverters.

Technical data and information on the connection requirements are provided on the nameplate and in the documentation; these must be observed under all circumstances.

2.3.1 Safety functions

Frequency inverters from SEW-EURODRIVE cannot perform any safety functions unless the inverters are subordinate to higher-level safety systems. Use higher-level safety systems to ensure protection of equipment and personnel.

When using the "Safe stop" function, you must observe the following publications:

- MOVITRAC® B Safe Disconnection – Conditions
- MOVITRAC® B Safe Disconnection – Applications

2.4 Transportation, storage

You must observe the notes on transportation, storage and proper handling. Observe the climatic conditions as stated in the section "General technical data".

2.5 Installation

The units must be installed and cooled according to the regulations and specifications in the corresponding documentation.

Protect the frequency inverters from excessive strain. Especially during transportation and handling, do not allow the components to be deformed and/or insulation spaces altered. Avoid contact with electronic components and contacts.

Frequency inverters contain components that can easily be damaged by electrostatic energy and improper handling. Prevent mechanical damage or destruction of electric components (may pose health risk).

The following applications are prohibited unless the unit is explicitly designed for such use:

- Use in potentially explosive areas
- Use in areas exposed to harmful oils, acids, gases, vapors, dust, radiation, etc.
- Use in non-stationary applications which are subject to mechanical vibration and impact loads in excess of the requirements in EN 61800-5-1.

2.6 Electrical connection

Observe the applicable national accident prevention guidelines when working on live frequency inverters (e.g. BGV A3).

Electrical installation must be carried out according to pertinent regulations (e.g., cable cross-sections, fusing, protective conductor connection). Additional information is contained in the documentation.

You will find notes on EMC-compliant installation, such as shielding, grounding, the arrangement of filters and the routing of lines, in the documentation of the frequency inverters. Always observe these instructions, even for frequency inverters bearing the CE marking. The manufacturer of the system or machine is responsible for maintaining the limits established by EMC legislation.

Protective measures and protection devices must comply with the regulations in force (e.g. EN 60204 or EN 61800-5-1).

Required protective measures: The unit must be grounded.

2.7 Safe disconnection

The unit meets all requirements for reliable isolation of power and electronics connections in accordance with EN 61800-5-1. All connected circuits must also satisfy the requirements for reliable isolation so that reliable isolation is ensured.

2.8 Operation

Systems with integrated frequency inverters must be equipped with additional monitoring and protection devices, as applicable, according to the relevant safety guidelines and regulations, such as legislation governing technical equipment, accident prevention regulations, etc. Changes to frequency inverters using the operating software are permitted.

Do not touch live components or power connections immediately after disconnecting the frequency inverters from the supply voltage because there may still be some charged capacitors. Note the respective information signs on the frequency inverter.

Keep all covers and doors closed during operation.

The fact that the status LED and other display elements are no longer illuminated does not indicate that the unit has been disconnected from the mains and no longer carries any voltage.

Mechanical blocking or safety functions inside the unit may result in the motor coming to a standstill. Eliminating the cause of the problem or performing a reset can result in the drive re-starting automatically. If, for safety reasons, this is not permitted for the driven machine, disconnect the unit from the mains before correcting the fault.

3 System Description MOVITRAC® B

Compact and economic: MOVITRAC® B – the next generation frequency inverter.

3.1 MOVITRAC® B – compact, versatile and universal

The percentage of speed-variable AC drives with inverter technology is constantly increasing, and these units offer all options to optimize system and machine concepts to the process sequences in addition to machine-conserving drive technology. The expanse of these different fields of application shows that it is difficult to meet the technological and economic requirements with one universal inverter class.

The drive electronics in asynchronous AC motors are separated into standard inverters, for simple applications, e.g. materials handling, and application inverters, for more complex technological applications, e.g. positioning and handling applications. This differentiation of the units allows scaling to different applications while staying with a certain budget.

Operation, parameter setting, diagnostics and integration in automation concepts must offer unit-comprehensive and therefore universal engineering and communication support. Engineering tools for project planning, parameter setting and startup as well as availability of communication interfaces (fieldbuses and Industrial Ethernet) offer users a solution-oriented and unit-independent user interface.

3.2 MOVITRAC® B system overview

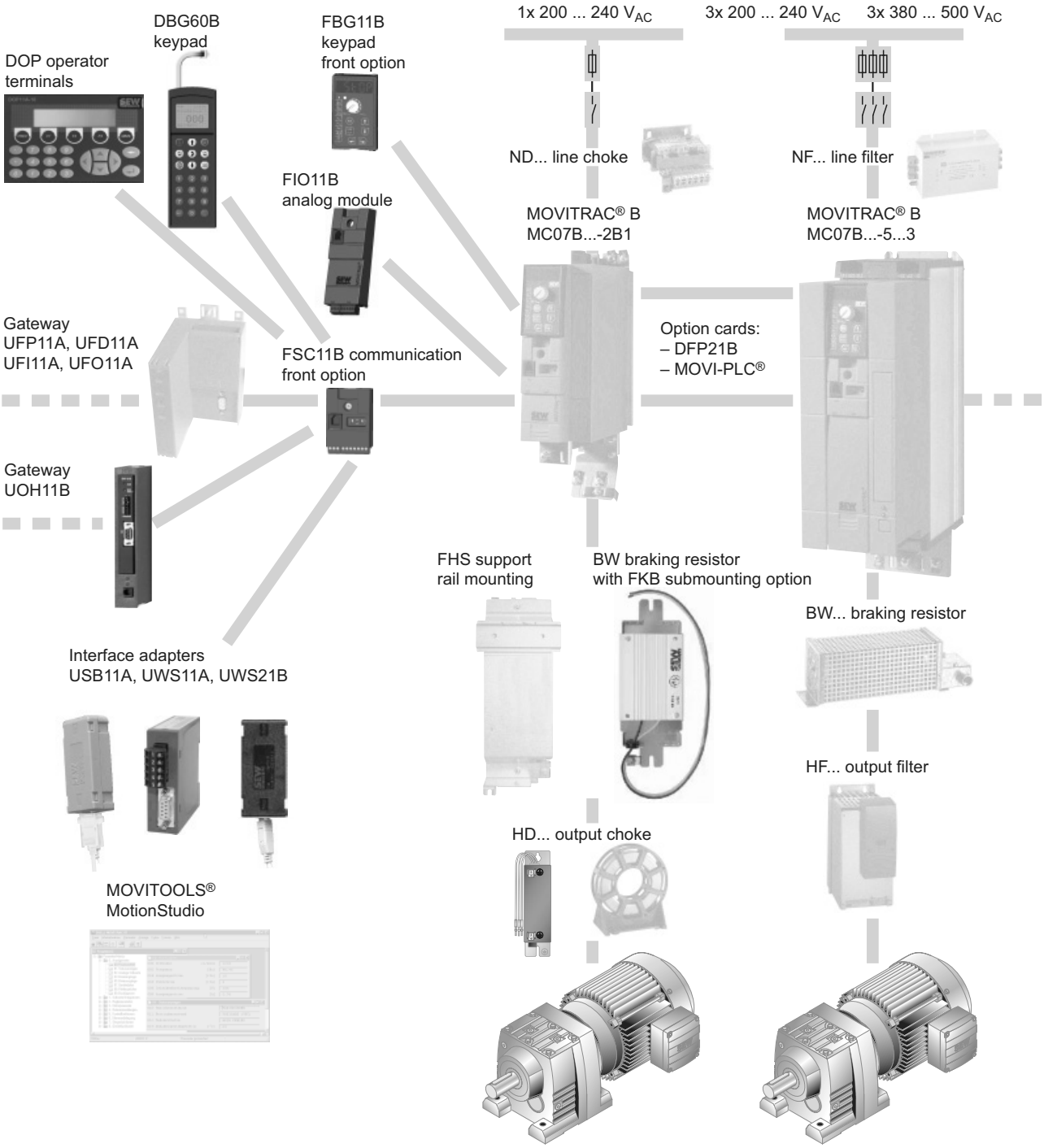

Mains connection
- ND line choke
- NF line filter

Power connection
- HF output filter
- HD output choke

BW braking resistor

Front options
- FBG11B keypad
- FIO11B analog module
- FSC11B communication for connecting (only one option possible):
  - DBG60B keypad
  - UFx gateway
  - UOH gateway
  - UWS/USB interface adapter
  - SBus
  - RS-485
  - DOP operator terminals

Option cards
- PROFIBUS
- MOVI-PLC® control

Installation
- FHS mounting rail attachment
- Submounting option for FKB braking resistor

MOVITOOLS® MotionStudio software

3.3 The units at a glance

Mains connection	Motor power	Rated output current	MOVITRAC® B type	Size
230 V 1-phase	0.25 kW (0.4 HP)	AC 1.7 A	MC07B**0003**-2B1-4-00	0XS
	0.37 kW (0.5 HP)	AC 2.5 A	MC07B**0004**-2B1-4-00	
	0.55 kW (0.75 HP)	AC 3.3 A	MC07B**0005**-2B1-4-00	0S
	0.75 kW (1.0 HP)	AC 4.2 A	MC07**B0008**-2B1-4-00	
	1.1 kW (1.5 HP)	AC 5.7 A	MC07B**0011**-2B1-4-00	0L
	1.5 kW (2.0 HP)	AC 7.3 A	MC07B**0015**-2B1-4-00	
	2.2 kW (3.0 HP)	AC 8.6 A	MC07B**0022**-2B1-4-00	
230 V 3-phase	0.25 kW (0.4 HP)	AC 1.7 A	MC07B**0003**-2A3-4-00	0XS
	0.37 kW (0.5 HP)	AC 2.5 A	MC07B**0004**-2A3-4-00	
	0.55 kW (0.75 HP)	AC 3.3 A	MC07B**0005**-2A3-4-00	0S
	0.75 kW (1.0 HP)	AC 4.2 A	MC07B**0008**-2A3-4-00	
	1.1 kW (1.5 HP)	AC 5.7 A	MC07B**0011**-2A3-4-00	0L
	1.5 kW (2.0 HP)	AC 7.3 A	MC07B**0015**-2A3-4-00	
	2.2 kW (3.0 HP)	AC 8.6 A	MC07B**0022**-2A3-4-00	
	3.7 kW (5.0 HP)	AC 14.5 A	MC07B**0037**-2A3-4-00	1
	5.5 kW (7.5 HP)	AC 22 A	MC07B**0055**-2A3-4-00	2
	7.5 kW (10 HP)	AC 29 A	MC07B**0075**-2A3-4-00	
	11 kW (15 HP)	AC 42 A	MC07B**0110**-203-4-00	3
	15 kW (20 HP)	AC 54 A	MC07B**0150**-203-4-00	
	22 kW (30 HP)	AC 80 A	MC07B**0220**-203-4-00	4
	30 kW (40 HP)	AC 95 A	MC07B**0300**-203-4-00	
400 V 3-phase	0.25 kW (0.4 HP)	AC 1.0 A	MC07B**0003**-5A3-4-00	0XS
	0.37 kW (0.5 HP)	AC 1.6 A	MC07B**0004**-5A3-4-00	
	0.55 kW (0.75 HP)	AC 2.0 A	MC07B**0005**-5A3-4-00	0S
	0.75 kW (1.0 HP)	AC 2.4 A	MC07B**0008**-5A3-4-00	
	1.1 kW (1.5 HP)	AC 3.1 A	MC07B**0011**-5A3-4-00	
	1.5 kW (2.0 HP)	AC 4.0 A	MC07B**0015**-5A3-4-00	
	2.2 kW (3.0 HP)	AC 5.5 A	MC07B**0022**-5A3-4-00	0L
	3.0 kW (4.0 HP)	AC 7.0 A	MC07B**0030**-5A3-4-00	
	4.0 kW (5.0 HP)	AC 9.5 A	MC07B**0040**-5A3-4-00	
	5.5 kW (7.5 HP)	AC 12.5 A	MC07B**0055**-5A3-4-00	2S
	7.5 kW (10 HP)	AC 16.0 A	MC07B**0075**-5A3-4-00	
	11 kW (15 HP)	AC 24.0 A	MC07B**0110**-5A3-4-00	2
	15 kW (20 HP)	AC 32.0 A	MC07B**0150**-503-4-00	3
	22 kW (30 HP)	AC 46.0 A	MC07B**0220**-503-4-00	
	30 kW (40 HP)	AC 60.0 A	MC07B**0300**-503-4-00	
	37 kW (50 HP)	AC 65.7 A	MC07B**0370**-503-4-00	4
	45 kW (60 HP)	AC 80.1 A	MC07B**0450**-503-4-00	
	55 kW (75 HP)	AC 105 A	MC07B**0550**-503-4-00	5
	75 kW (100 HP)	AC 130 A	MC07B**0750**-503-4-00	

3.4 Functions / features

MOVITRAC® B frequency inverters are characterized by the following features:

3.4.1 Unit properties

- Wide voltage range:
  - 230 V units for the voltage range 1 × AC 200 ... 240 V, 50/60 Hz
  - 230 V units for the voltage range 3 × AC 200 ... 240 V, 50/60 Hz
  - 400/500 V units for the voltage range 3 × AC 380 ... 500 V, 50/60 Hz
- Overload capacity: 125 % I_{Rated} continuous operation
  150 % I_{Rated} for at least 60 s
  Maximum 200 % breakaway torque (BG0)
- Rated operation up to an ambient temperature ϑ = 50 °C (122 °F), operation up to an ambient temperature ϑ = 60 °C (140 °F) possible with current reduction.
- Speed range 0 ... 5500 rpm.
- Output frequency range:
  - VFC: 0 ... 150 Hz
  - V/f: 0 ... 600 Hz
- 4-quadrant capability due to the integrated brake chopper.
- Compact unit design for minimum control cabinet space requirement and optimum utilization of control cabinet volume.
- Devices in the "safe stop" version are available for:
  - 3 × AC 380 ... 500 V, 0.55 ... 75 kW (0.74 ... 100 HP)
- Integrated EMC line filter to maintain the specified limit classes (C1/C2 according to EN 61800-3 / A/B according to EN 55011/55014) on the mains side:
  - Sizes 0 ... 2: C2 (A) without further measures
  - Sizes 0 ... 5: C1 (B) with corresponding filters / foldable ferrites
- Configurable inputs / outputs
  - 1 analog input
  - 6 binary inputs
  - 3 binary outputs, including 1 relay output
  - Optional: 1 additional analog input / 1 additional analog output
- Voltage supply and evaluation for TF (PTC temperature sensor) integrated for monitoring the motor temperature.
- Integrated evaluation of TH for monitoring the temperature of the motor.
- Integrated keypad for displaying setpoints and setting parameters
  - 5-digit 7-segment display
  - 9 LEDs for displaying the selected symbols
  - 6 keys for operation
  - 1 setpoint generator for speed specification
  - Parameter set data backup
- Braking resistor can be sub-mounted as an option for size 0.

- Separable signal terminals.
- Size 0:
  - Separable power terminals and signal terminals
  - EMC capacitor can be insulated for reduced earth-leakage currents and operation in IT network.
  - "Cold Plate" installation possible.
  - Large motor cable length
- Up to size 2S: Operation on MDR regenerative power supply unit possible (see MOVIDRIVE® B documentation).

3.4.2 Control

- V/f control or VFC control mode.
- Automatic brake rectifier control by the inverter.
- Standstill current function for:
  - Rapid start
  - Heating current for preventing condensation in the motor at low temperatures
- Flying start function for synchronizing the inverter to the running motor.
- Hoist capability.
- DC braking to decelerate the motor in 1Q mode.
- Slip compensation for high static speed accuracy.
- Motor pull-out protection by sliding current limitation in the field weakening range.
- Two complete motor parameter sets.
- Factory setting can be restored.
- Parameter lock for protection against changes to parameters.
- Protective functions for protection against
  - Over-current
  - Ground fault
  - Overload
  - Overtemperature of the inverter
  - Overtemperature of the motor (TF/TH)
- Speed monitoring and monitoring of the motor and regenerative limit power.
- 5 fault memories with all relevant operating data at the moment of the fault.
- Standardized operation, parameter setting and identical unit connection technology across all units in the MOVITRAC® B range.
- Configurable signal range monitoring (speed).
- Energy-saving function for optimizing the magnetization current automatically.

3.4.3 Setpoint technology

- Motor potentiometer.
- External setpoint selections:
  - 0 ... +10 V (unidirectional and bidirectional)
  - 0 ... 20 mA
  - 4 ... 20 mA
  - – 10 V ... + 10 V bidirectional with FIO11B
- Six fixed setpoints.
- Frequency input.

3.4.4 Optional communication / operation

- CAN-based system bus (SBus) for networking a maximum of 64 MOVITRAC® B units. A PC, a PLC or a MOVIDRIVE® unit can be the SBus master.
- CANopen Protocol DS301 V4.
- RS-485 interface.
- Simple parameter setting and startup using optional keypad or MOVITOOLS® MotionStudio software.
- Fieldbus interfaces for
  - PROFIBUS
  - DeviceNet
  - INTERBUS
  - CANopen
  - Ethernet-based:
    - EtherCAT
    - PROFINET (in preparation)
    - Ethernet/IP (in preparation)

3.5 MOVITOOLS® MotionStudio

The MOVITOOLS® MotionStudio program includes:

- Parameter tree
- Startup
- SCOPE
- Application Builder
- Data management

The MOVITRAC® B has the following functions:

- Startup
- Parameter setting
- Visualization / diagnostics

3.5.1 SCOPE

SCOPE for MOVITOOLS® MotionStudio is an oscilloscope program for SEW inverters. You can optimize drives independently using SCOPE. The inverter records, for example, response functions to setpoint changes in real time. You can transfer this information to the PC and graphically display it. SCOPE shows up to four analog and digital measured variables in differently colored curves. You can scale both the x-axis and the y-axis as required.

SCOPE also enables you to record digital input and output signals of the inverter. This means you can record complete program sequences of the higher-level controller and then evaluate them.

SCOPE supports simple documentation of the set parameters and the recorded measurement data by providing the following functions:

- Save
- Meta data
- Print

The online help functions enable you to familiarize yourself quickly with how to use SCOPE.

SCOPE is a multi-document interface (MDI application). Enables you to observe and analyze several SCOPE data records simultaneously. SCOPE displays every new data record in a new window. All settings made for displaying and editing the data set apply to the active window only.

4 Technical Data

4.1 CE marking, UL approval and C-Tick

4.1.1 CE marking

Low voltage directive

MOVITRAC® B frequency inverters comply with the regulations of the Low Voltage Directive 2006/95/EC and have the CE mark on the nameplate to this effect.

Electromagnetic compatibility (EMC)

The proper use of MOVITRAC® B frequency inverters is as components for installation in machinery and systems. They comply with the EMC product standard EN 61800-3 *Variable-speed electrical drives*. Provided the installation instructions are complied with, they satisfy the relevant requirements for the CE marking for the entire machine / system in which they are installed, on the basis of the EMC Directive 89/336/EEC. For detailed information on EMC compliant installation, refer to the publication "Electromagnetic Compatibility in Drive Engineering" from SEW-EURODRIVE.

Compliance with limit classes C2 / A and C1 / B has been tested on a specified test setup. SEW-EURODRIVE can provide detailed information on request.

4.1.2 UL approval

The UL and cUL approval (USA) has been awarded to MOVITRAC® B for units with a power supply connection of 230 V / 1-phase, 230 V / 3-phase, and 400/500 V / 3-phase (0.25 … 45 kW [0.34 ... 60 HP]). cUL approval has been applied for the other units. cUL is equivalent to CSA approval.

The GOST-R certificate (Russia) is approved for the MOVITRAC® B unit series.

4.1.3 C-Tick

C-Tick approval has been applied for for the entire MOVITRAC® B series. C-Tick certifies conformity with ACA (Australian Communications Authority) standards.

4.2 General technical data

The following technical data applies to all MOVITRAC® B frequency inverters, irrespective of size and power:

MOVITRAC® B:	All sizes
Interference immunity	Meets EN 61800-3
Interference emission with EMC compliant installation	According to limit value class[1)] • Sizes 0 ... 2: C2 (A) without further measures • Sizes 0 ... 5: C1 (B) with corresponding filters / foldable ferrites C1/C2 according to EN 55011/55014 / A/B according to EN 61800-3
Earth-leakage current	> 3.5 mA
Ambient temperature ϑ_A (up to 60 °C (140 °F) with current reduction)	• **230 V, 0.25 ... 2.2 kW (3.0 HP) / 400/500 V, 0.25 ... 4.0 kW (0.34 ... 5.4 HP)** **With overload capacity** (max. 150 % for 60 s): I_D = 125 % I_{Rated} / f_{PWM} = 4 kHz: –10 °C (14 °F) ... +40 °C (104 °F) **Without high overload capacity:** I_D = 100 % I_{Rated} / f_{PWM} = 4 kHz: –10 °C (14 °F) ... +50 °C (122 °F) I_D = 125 % I_{Rated} / f_{PWM} = 4 kHz: –10 °C (14 °F) ... +40 °C (104 °F) I_D = 100 % I_{Rated} / f_{PWM} = 8 kHz: –10 °C (14 °F) ... +40 °C (104 °F) • **3 × 230 V, 3.7 ... 30 kW (40 HP) / 400/500 V, 5.5 ... 75 kW (7.4 ... 10 HP)** **With overload capacity** (max. 150 % for 60 s): I_D = 125 % I_{Rated} / f_{PWM} = 4 kHz: 0 °C (32 °F) ... +40 °C (104 °F) **Without high overload capacity:** I_D = 100 % I_{Rated} / f_{PWM} = 4 kHz: 0 °C (32 °F) ... +50 °C (122 °F) I_D = 125 % I_{Rated} / f_{PWM} = 4 kHz: 0 °C (32 °F) ... +40 °C (104 °F) I_D = 100 % I_{Rated} / f_{PWM} = 8 kHz: 0 °C (32 °F) ... +40 °C (104 °F) • Mounting platform with "**Cold plate**" < 70 °C (158 °F)
Derating ambient temperature (current reduction)	• 2.5 % I_{Rated} per K at 40 °C (104 °F) ... 50 °C (122 °F) • 3 % I_{Rated} per K at 50 °C (+122 °F) … 60 °C (140 °F)
Climate class	EN 60721-3-3, class 3K3
Storage temperature Shipping temperature	–25 °C (–13 °F) … +75 °C (167 °F) –25 °C (–13 °F) … +75 °C (167 °F)
Type of cooling	Self-cooling: 230 V: ≤ 0.75 kW (1.0 HP); 400/500 V: ≤ 1.1 kW (1.5 HP) Forced cooling: 230 V: ≥ 1.1 kW (1.5 HP) (temperature-controlled fans, Response threshold 45 °C [113 °F]) 400/500 V: ≥ 1.5 kW (2.0 HP)
Enclosure EN 60529 (NEMA1)	Sizes 0 ... 3: IP20 Sizes 4 ... 5 power connections: • IP00 • With the supplied Plexiglas cover mounted and mounted shrinking tube (not supplied) IP10
Operating mode	Continuous duty (EN 60149-1-1 and 1-3)
Overvoltage category	III according to IEC 60664-1 (VDE 0110-1)
Pollution class	2 according to IEC 60664-1 (VDE 0110-1)
Installation altitude	Up to h ≤ 1000 m (3281 ft) without restrictions. When h ≥ 1000 m (3281 ft), the following restrictions apply: • From 1000 m (3281 ft) to max. 4000 m (13,123 ft): – I_{Rated} reduction by 1 % per 100 m (328 ft) • From 2000 m (6562 ft) to max. 4000 m (13,123 ft): – AC 230 V units: V_{Rated} reduction by AC 3 V per 100 m (328 ft) – AC 500 V units: V_{Rated} reduction by AC 6 V per 100 m (328 ft) Over 2000 m (6562 ft) only overvoltage class 2, external measures are required for overvoltage class 3. Overvoltage classes according to DIN VDE 0110-1.
Size 0: Limitations for continuous operation with 125 % I_{Rated}	• Maximum ambient temperature ϑ_A: 40 °C (104 °F) • Maximum supply voltage V_{Mains}: 400 V • No DIN rail mounting / submounting resistor • With 1 × 230 V: Provide line choke ND

1) Electrical installation in compliance with applicable regulations is necessary for maintaining the EMC limit value class. Comply with the installation notes.

4.3 MOVITRAC® B electronics data

Function	Terminal	Designation	Default	Data
Setpoint input[1] (differential input)	X10:1 X10:2 X10:3 X10:4	10V0 AI11 (+) AI12 (0) GND		+10 V, I_{max} = 3 mA 0 ... +10 V (R_i > 200 kΩ) 0 ... 20 mA / 4 ... 20 mA (Ri = 250 Ω), 10 bit resolution, sampling time 1 ms GND = Reference potential for binary and analog signals, PE potential
Binary inputs	X12:1 X12:2 X12:3 X12:4 X12:5 X12.6	DI00 DI01 DI02 DI03 DI04 DI05TF	Fault reset CW/Stop CCW/Stop Enable/Stop n11/n21 n12/n22	Ri = 3 kΩ, I_E = 10 mA, sample cycle 5 ms, PLC compatible Signal level according to EN 61131-2 type 1 or 3: • +11 ... +30 V → 1 / contact made • –3 ... +5 V → 0 / contact open • X12:2 / DI01 with fixed assignment CW/Stop • X12:5 / DI04 can be used as frequency input • X12:6 / DI05 can be used as TF input
Supply voltage for TF	X12:7	VOTF		Special characteristics for TF according to DIN EN 60947-8/trigger value 3 kΩ
Auxiliary supply output / External voltage supply	X12:8	24VIO		Auxiliary supply output: V = DC 24 V, current carrying capacity I_{max} = 50 mA External voltage supply: V = DC 24 V –15 % / +20 % according to EN 61131-2 I = DC: See section Project planning/external DC 24 V voltage supply.
Reference terminal	X12:9	GND		Reference potential for binary and analog signals, PE potential
Binary outputs	X13:1 X13:2 X13:3 X13:4	GND DO02 DO03 GND	Brake released Ready for operation	PLC compatible, response time 5 ms, I_{max} DO02 = 150 mA, I_{max} DO03 = 50 mA, Short-circuit proof, protected against external voltage up to 30 V GND = Reference potential for binary and analog signals, PE potential
Relay output	X13:5 X13:6 X13:7	DO01-C DO01-NO DO01-NC		Shared relay contact NO contact NC contact Load capacity: V_{max} = 30 V, I_{max} = 800 mA
Safety contact	X17:1 X17:2 X17:3 X17:4	DGND VO24 SVO24 SV24		Reserved, see manuals: • Safe Disconnection – Conditions • Safe Disconnection – Applications
Terminal response times	Binary input and output terminals are updated every 5 ms			
Max. cable cross-section	1.5 mm^2 (AWG15) without conductor end sleeves 1.0 mm^2 (AWG17) with conductor end sleeves			

1) If the setpoint input is not used, it should be set to GND. Otherwise a measured input voltage of –1... +1 V is set.

4.4 MOVITRAC® B technical data

4.4.1 MOVITRAC® B overview

400 / 500 V

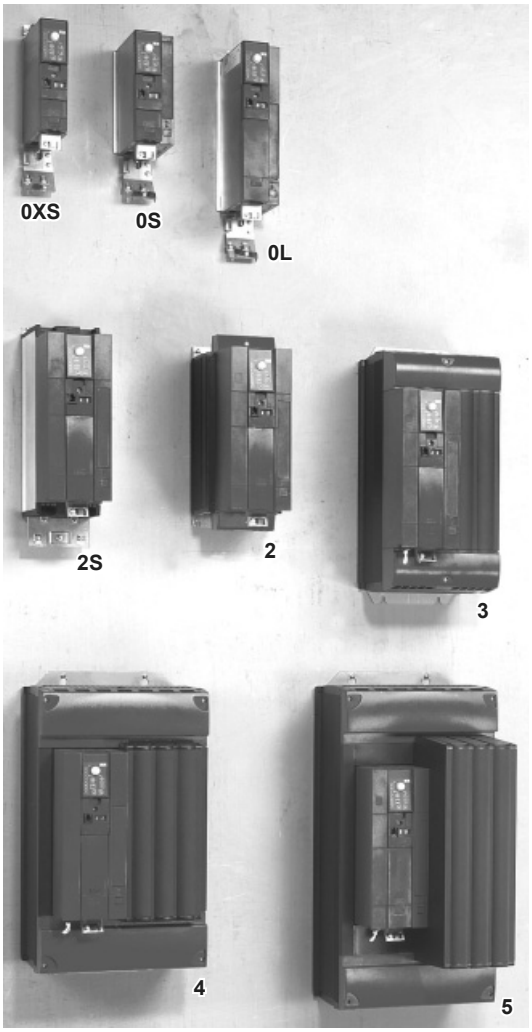

230 V

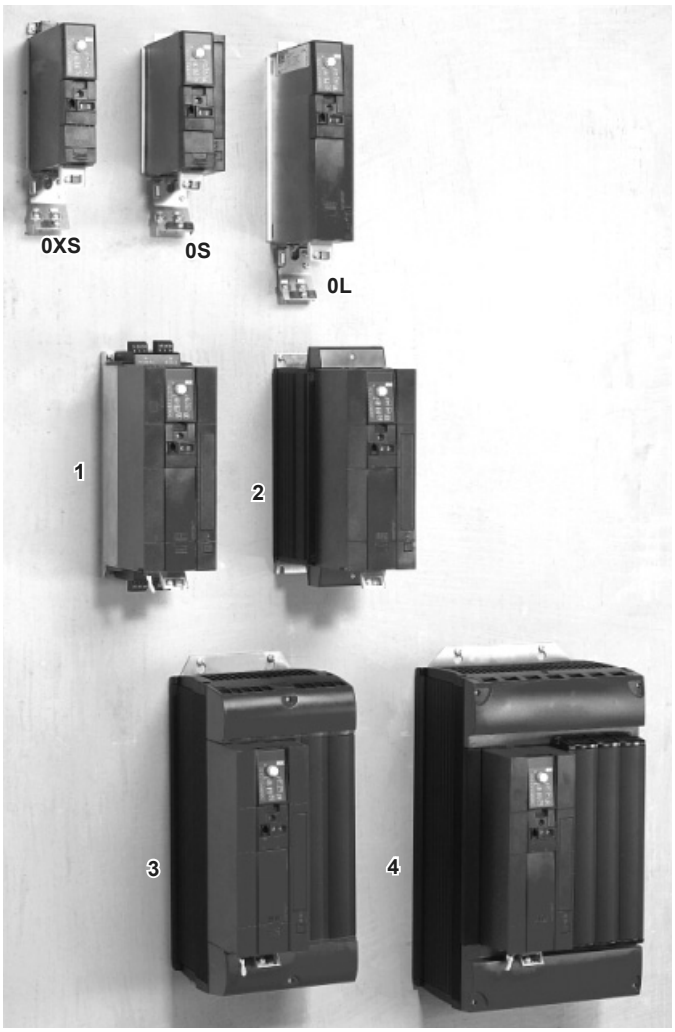

Power supply connection 230 V / 1-phase			
Size	**0XS**	**0S**	**0L**
Power [kW / HP]	0.25 / 0.4 0.37 / 0.5	0.55 / 0.75 0.75 / 1.0	1.1 / 1.5 1.5 / 2.0 2.2 / 3.0

Power supply connection 400 / 500 V / 3-phase								
Size	**0XS**	**0S**	**0L**	**2S**	**2**	**3**	**4**	**5**
Power [kW / HP]	0.25 / 0.4 0.37 / 0.5	0.55 / 0.75 0.75 / 1.0 1.1 / 1.5 1.5 / 2.0	2.2 / 3.0 3.0 / 4.0 4.0 / 5.0	5.5 / 7.5 7.5 / 10	11 / 15	15 / 20 22 / 30 30 / 40	37 / 50 45 / 60	55 / 75 75 / 100

Power supply connection 230 V / 3-phase							
Size	**0XS**	**0S**	**0L**	**1**	**2**	**3**	**4**
Power [kW / HP]	0.25 / 0.4 0.37 / 0.5	0.55 / 0.75 0.75 / 1.0	1.1 / 1.5 1.5 / 2.0 2.2 / 3.0	3.7 / 5	5.5 / 7.5 7.5 / 10	11 / 15 15 / 20	22 / 30 30 / 40

4.4.2 AC 230 V / 1-phase / size 0XS / 0.25… 0.37 kW (0.4… 05 HP)

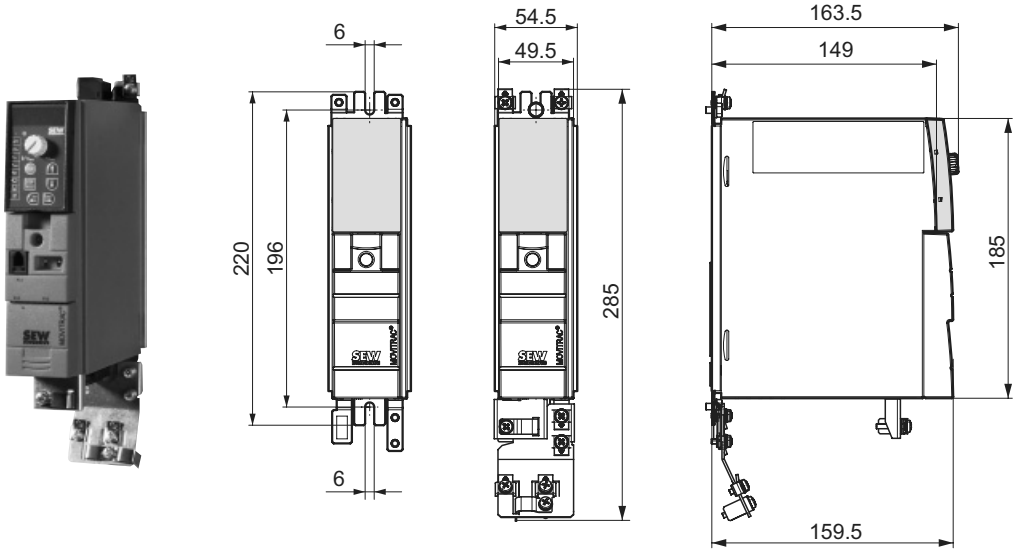

MOVITRAC® MC07B (1-phase mains) Part number		0003-2B1-4-00 828 491 1	0004-2B1-4-00 828 493 8
INPUT			
Permitted rated supply voltage	V_{Mains}	1 × AC 230 V V_{Mains} = AC 200 V – 10 %… AC 240 V + 10 %	
Rated supply frequency	f_{Mains}	50 / 60 Hz ± 5 %	
Rated mains current 100 % operation Rated mains current 125 % operation	I_{Mains} $I_{Mains\ 125}$	AC 4.3 A AC 5.5 A	AC 6.1 A AC 7.5 A
OUTPUT			
Output voltage	V_{Output}	3 × 0 ... V_{Mains}	
Recommended motor power 100 % operation Recommended motor power 125 % operation	P_{Mot} $P_{Mot\ 125}$	0.25 kW (0.4 HP) 0.37 kW (0.5 HP)	0.37 kW (0.5 HP) 0.55 kW (0.75 HP)
Rated output current 100 % operation Rated output current 125 % operation	I_{Rated} $I_{Rated\ 125}$	AC 1.7 A AC 2.1 A	AC 2.5 A AC 3.1 A
Apparent output power 100 % operation Apparent output power 125 % operation	S_{Rated} $S_{Rated\ 125}$	0.7 kVA 0.9 kVA	1.0 kVA 1.3 kVA
Minimum permitted braking resistance value (4 quadrant operation)	R_{Br_min}	27 Ω	
GENERAL INFORMATION			
Power loss 100 % operation Power loss 125 % operation	P_{Loss} $P_{Loss\ 125}$	30 W (0.040 HP) 35 W (0.047 HP)	35 W (0.047 HP) 45 W (0.060 HP)
Current limitation		150 % I_{Rated} for at least 60 seconds	
Connections/tightening torque	Terminals	4 mm^2 (AWG12) / 0.5 Nm (4.4 in·lb)	
Dimensions	W × H × D	54.5 × 185 × 163.5 mm (2.0 × 7.3 × 6.4 in)	
Mass	m	1.3 kg (2.9 lb)	

4.4.3 AC 230 V / single-phase / size 0S / 0.55 ... 0.75 kW (0.75 ... 1.0 HP)

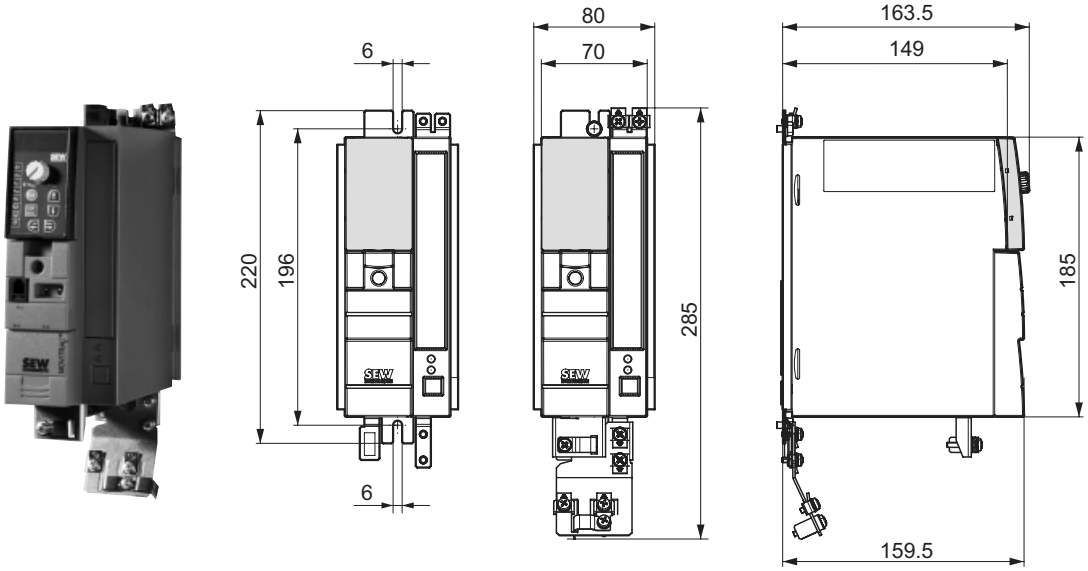

MOVITRAC® MC07B (1-phase supply system) Part number		0005-2B1-4-00 828 494 6	0008-2B1-4-00 828 495 4
INPUT			
Permitted rated supply voltage	V_{Mains}	1 × AC 230 V V_{Mains} = AC 200 V – 10 %… AC 240 V + 10 %	
Rated supply frequency	f_{Mains}	50 / 60 Hz ± 5 %	
Rated mains current 100 % operation Rated mains current 125 % operation	I_{Mains} $I_{Mains\ 125}$	AC 8.5 A AC 10.2 A	AC 9.9 A AC 11.8 A
OUTPUT			
Output voltage	V_{Output}	3 × 0 ... V_{Mains}	
Recommended motor power 100 % operation Recommended motor power 125 % operation	P_{Mot} $P_{Mot\ 125}$	0.55 kW (0.75 HP) 0.75 kW (1.0 HP)	0.75 kW (1.0 HP) 1.1 kW (1.5 HP)
Rated output current 100 % operation Rated output current 125 % operation	I_{Rated} $I_{Rated\ 125}$	AC 3.3 A AC 4.1 A	AC 4.2 A AC 5.3 A
Apparent output power 100 % operation Apparent output power 125 % operation	S_{Rated} $S_{Rated\ 125}$	1.4 kVA 1.7 kVA	1.7 kVA 2.1 kVA
Minimum permitted braking resistance value (4 quadrant operation)	R_{Br_min}	27 Ω	
GENERAL INFORMATION			
Power loss 100 % operation Power loss 125 % operation	P_{Loss} $P_{Loss\ 125}$	45 W (0.060 HP) 50 W (0.067 HP)	50 W (0.067 HP) 65 W (0.087 HP)
Current limitation		150 % I_{Rated} for at least 60 seconds	
Connections/tightening torque	Terminals	4 mm^2 (AWG12) / 0.5 Nm (4.4 in·lb)	
Dimensions	W × H × D	80 × 185 × 163.5 mm (3.1 × 7.3 × 6.4 in)	
Mass	m	1.5 kg (3.3 lb)	

4.4.4 AC 230 V / single-phase / size 0L / 1.1 ... 2.2 kW (1.5… 3.0 HP)

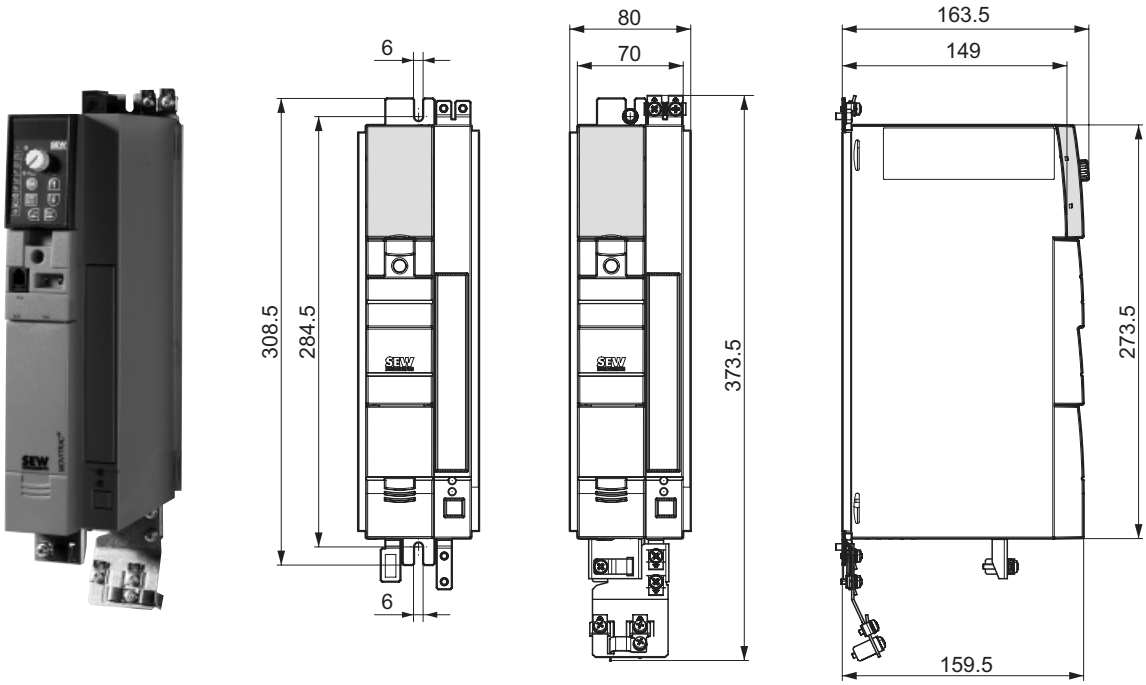

MOVITRAC® MC07B (1-phase supply system)		0011-2B1-4-00	0015-2B1-4-00	0022-2B1-4-00
Part number		**828 496 2**	**828 497 0**	**828 498 9**
INPUT				
Permitted rated supply voltage	V_{Mains}	1 × AC 230 V V_{Mains} = AC 200 V – 10 %… AC 240 V + 10 %		
Rated supply frequency	f_{Mains}	50 / 60 Hz ± 5 %		
Rated mains current 100 % operation Rated mains current 125 % operation	I_{Mains} $I_{Mains\ 125}$	AC 13.4 A AC 16.8 A	AC 16.7 A AC 20.7 A	AC 19.7 A AC 24.3 A
OUTPUT				
Output voltage	V_{Output}	3 × 0 ... V_{Mains}		
Recommended motor power 100 % operation Recommended motor power 125 % operation	P_{Mot} $P_{Mot\ 125}$	1.1 kW (1.5 HP) 1.5 kW (2.0 HP)	1.5 kW (2.0 HP) 2.2 kW (3.0 HP)	2.2 kW (3.0 HP) 3.0 kW (4.0 HP)
Rated output current 100 % operation Rated output current 125 % operation	I_{Rated} $I_{Rated\ 125}$	AC 5.7 A AC 7.1 A	AC 7.3 A AC 9.1 A	AC 8.6 A AC 10.8 A
Apparent output power 100 % operation Apparent output power 125 % operation	S_{Rated} $S_{Rated\ 125}$	2.3 kVA 2.9 kVA	3.0 kVA 3.7 kVA	3.5 kVA 4.3 kVA
Minimum permitted braking resistance value (4 quadrant operation)	R_{Br_min}	27 Ω		
GENERAL INFORMATION				
Power loss 100 % operation Power loss 125 % operation	P_{Loss} $P_{Loss\ 125}$	70 W (0.094 HP) 90 W (0.12 HP)	90 W (0.12 HP) 110 W (0.148 HP)	105 W (0.141 HP) 132 W (0.177 HP)
Current limitation		150 % I_{Rated} for at least 60 seconds		
Connections/tightening torque	Terminals	4 mm^2 (AWG12) / 0.5 Nm (4.4 in·lb)		
Dimensions	W × H × D	80 × 273.5 × 163.5 mm (3.1 × 10.8 × 6.4 in)		
Mass	m	2.2 kg (4.9 lb)		

4.4.5 AC 230 V / 3-phase / size 0XS / 0.25… 0.37 kW (0.4… 0.5 HP)

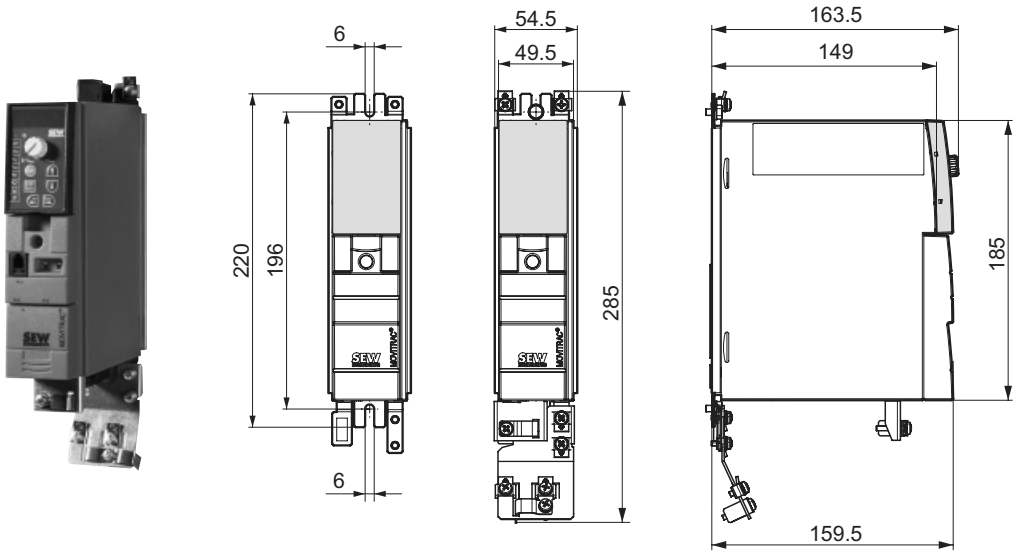

MOVITRAC® MC07B (3-phase mains) Part number		0003-2A3-4-00 828 499 7	0004-2A3-4-00 828 500 4
INPUT			
Permitted rated supply voltage	V_{Mains}	3 × AC 230 V V_{Mains} = AC 200 V – 10 %… AC 240 V + 10 %	
Rated supply frequency	f_{Mains}	50 / 60 Hz ± 5 %	
Rated mains current 100 % operation Rated mains current 125 % operation	I_{Mains} $I_{Mains\ 125}$	AC 1.6 A AC 1.9 A	AC 2.0 A AC 2.4 A
OUTPUT			
Output voltage	V_{Output}	3 × 0 ... V_{Mains}	
Recommended motor power 100 % operation Recommended motor power 125 % operation	P_{Mot} $P_{Mot\ 125}$	0.25 kW (0.4 HP) 0.37 kW (0.5 HP)	0.37 kW (0.5 HP) 0.55 kW (0.75 HP)
Rated output current 100 % operation Rated output current 125 % operation	I_{Rated} $I_{Rated\ 125}$	AC 1.7 A AC 2.1 A	AC 2.5 A AC 3.1 A
Apparent output power 100 % operation Apparent output power 125 % operation	S_{Rated} $S_{Rated\ 125}$	0.7 kVA 0.9 kVA	1.0 kVA 1.3 kVA
Minimum permitted braking resistance value (4 quadrant operation)	R_{Br_min}	27 Ω	
GENERAL INFORMATION			
Power loss 100 % operation Power loss 125 % operation	P_{Loss} $P_{Loss\ 125}$	35 W (0.047 HP) 40 W (0.054 HP)	40 W (0.054 HP) 50 W (0.067 HP)
Current limitation		150 % I_{Rated} for at least 60 seconds	
Connections/tightening torque	Terminals	4 mm^2 (AWG12) / 0.5 Nm (4.4 in·lb)	
Dimensions	W × H × D	54.5 × 185 × 163.5 mm (2.0 × 7.3 × 6.4 in)	
Mass	m	1.3 kg (2.9 lb)	

4.4.6 AC 230 V / 3-phase / size 0S / 0.55 ... 0.75 kW (0.75 ... 1.0 HP)

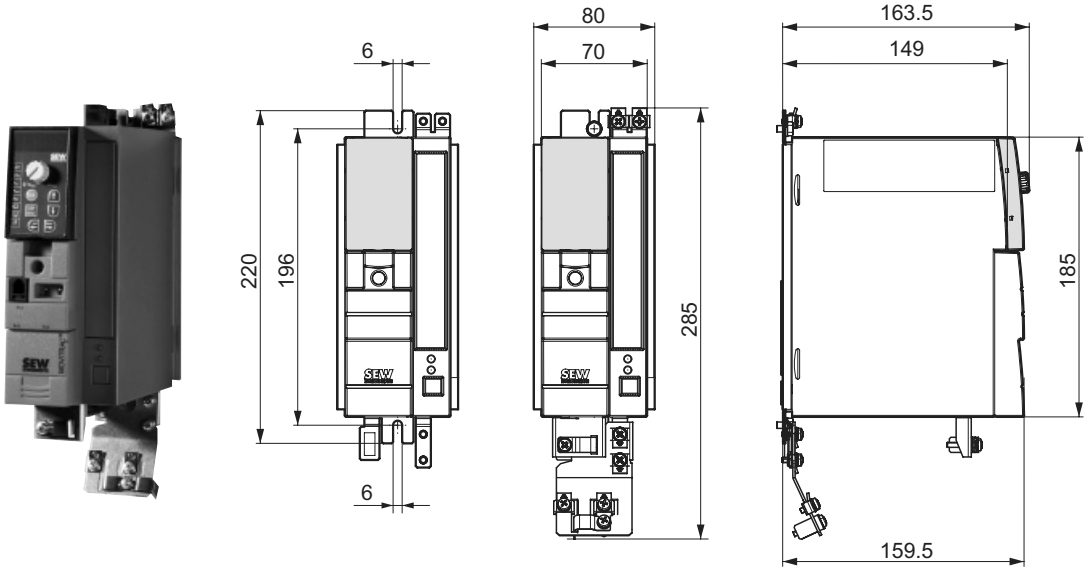

MOVITRAC® MC07B (3-phase mains)		0005-2A3-4-00	0008-2A3-4-00
Part number		**828 501 2**	**828 502 0**
INPUT			
Permitted rated supply voltage	V_{Mains}	3 × AC 230 V V_{Mains} = AC 200 V – 10 %… AC 240 V + 10 %	
Rated supply frequency	f_{Mains}	50 / 60 Hz ± 5 %	
Rated mains current 100 % operation Rated mains current 125 % operation	I_{Mains} $I_{Mains\ 125}$	AC 2.8 A AC 3.4 A	AC 3.3 A AC 4.1 A
OUTPUT			
Output voltage	V_{Output}	3 × 0 ... V_{Mains}	
Recommended motor power 100 % operation Recommended motor power 125 % operation	P_{Mot} $P_{Mot\ 125}$	0.55 kW (0.75 HP) 0.75 kW (1.0 HP)	0.75 kW (1.0 HP) 1.1 kW (1.5 HP)
Rated output current 100 % operation Rated output current 125 % operation	I_{Rated} $I_{Rated\ 125}$	AC 3.3 A AC 4.1 A	AC 4.2 A AC 5.3 A
Apparent output power 100 % operation Apparent output power 125 % operation	S_{Rated} $S_{Rated\ 125}$	1.4 kVA 1.7 kVA	1.7 kVA 2.1 kVA
Minimum permitted braking resistance value (4 quadrant operation)	R_{Br_min}	27 Ω	
GENERAL INFORMATION			
Power loss 100 % operation Power loss 125 % operation	P_{Loss} $P_{Loss\ 125}$	50 W (0.067 HP) 60 W (0.080 HP)	60 W (0.080 HP) 75 W (0.10 HP)
Current limitation		150 % I_{Rated} for at least 60 seconds	
Connections/tightening torque	Terminals	4 mm^2 (AWG12) / 0.5 Nm (4.4 in·lb)	
Dimensions	W × H × D	80 × 185 × 163.5 mm (3.1 × 7.3 × 6.4 in)	
Mass	m	1.5 kg (3.3 lb)	

4.4.7 AC 230 V / 3-phase / size 0L / 1.1 ... 2.2 kW (1.5 ... 3.0 HP)

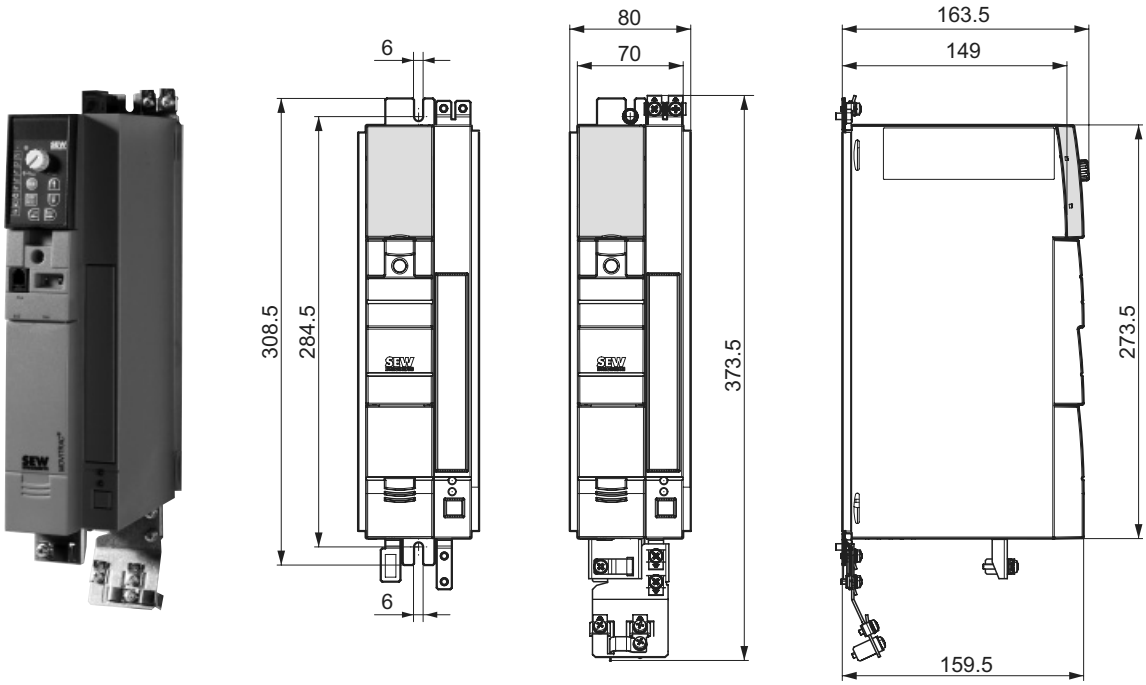

MOVITRAC® MC07B (3-phase mains)		0011-2A3-4-00	0015-2A3-4-00	0022-2A3-4-00
Part number		**828 503 9**	**828 504 7**	**828 505 5**
INPUT				
Permitted rated supply voltage	V_{Mains}	3 × AC 230 V V_{Mains} = AC 200 V – 10 %… AC 240 V + 10 %		
Rated supply frequency	f_{Mains}	50 / 60 Hz ± 5 %		
Rated mains current 100 % operation Rated mains current 125 % operation	I_{Mains} $I_{Mains\ 125}$	AC 5.1 A AC 6.3 A	AC 6.4 A AC 7.9 A	AC 7.6 A AC 9.5 A
OUTPUT				
Output voltage	V_{Output}	3 × 0 ... V_{Mains}		
Recommended motor power 100 % operation Recommended motor power 125 % operation	P_{Mot} $P_{Mot\ 125}$	1.1 kW (1.5 HP) 1.5 kW (2.0 HP)	1.5 kW (2.0 HP) 2.2 kW (3.0 HP)	2.2 kW (3.0 HP) 3.0 kW (4.0 HP)
Rated output current 100 % operation Rated output current 125 % operation	I_{Rated} $I_{Rated\ 125}$	AC 5.7 A AC 7.1 A	AC 7.3 A AC 9.1 A	AC 8.6 A AC 10.8 A
Apparent output power 100 % operation Apparent output power 125 % operation	S_{Rated} $S_{Rated\ 125}$	2.3 kVA 2.9 kVA	3.0 kVA 3.7 kVA	3.5 kVA 4.3 kVA
Minimum permitted braking resistance value (4 quadrant operation)	R_{Br_min}	27 Ω		
GENERAL INFORMATION				
Power loss 100 % operation Power loss 125 % operation	P_{Loss} $P_{Loss\ 125}$	75 W (0.10 HP) 90 W (0.12 HP)	90 W (0.12 HP) 110 W (0.148 HP)	105 W (0.141 HP) 140 W (0.188 HP)
Current limitation		150 % I_{Rated} for at least 60 seconds		
Connections/tightening torque	Terminals	4 mm^2 (AWG12) / 0.5 Nm (4.4 in·lb)		
Dimensions	W × H × D	80 × 273.5 × 163.5 mm (3.1 × 10.8 × 6.4 in)		
Mass	m	2.2 kg (4.9 lb)		

4.4.8 AC 230 V / 3-phase / size 1 / 3.7 kW (5 HP)

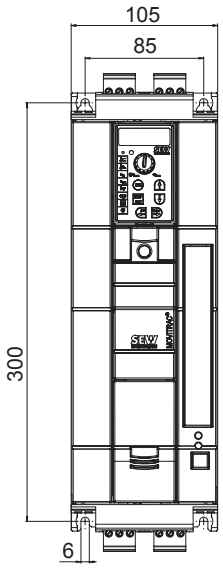

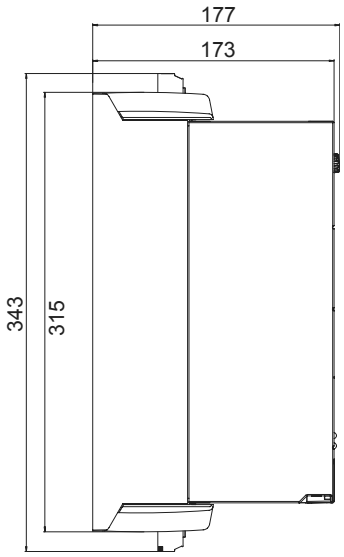

MOVITRAC® MV07B (3-phase mains) Part number		0037-2A3-4-00 828 506 3
INPUT		
Permitted rated supply voltage	V_{Mains}	3 × AC 400 V V_{Mains} = AC 380 V – 10 %… AC 500 V + 10 %
Rated supply frequency	f_{Mains}	50 / 60 Hz ± 5 %
Rated mains current 100 % operation Rated mains current 125 % operation	I_{Mains} $I_{Mains\ 125}$	AC 12.9 A AC 16.1 A
OUTPUT		
Output voltage	V_{Output}	3 × 0 ... V_{Mains}
Recommended motor power 100 % operation Recommended motor power 125 % operation	P_{Mot} $P_{Mot\ 125}$	3.7 kW (5.5 HP) 5.5 kW (7.5 HP)
Rated output current 100 % operation Rated output current 125 % operation	I_{Rated} $I_{Rated\ 125}$	AC 14.5 A AC 18.1 A
Apparent output power 100 % operation Apparent output power 125 % operation	S_{Rated} $S_{Rated\ 125}$	5.8 kVA 7.3 kVA
Minimum permitted braking resistance value (4 quadrant operation)	R_{Br_min}	27 Ω
GENERAL INFORMATION		
Power loss 100 % operation Power loss 125 % operation	P_{Loss} $P_{Loss\ 125}$	210 W (0.282 HP) 270 W (0.362 HP)
Current limitation		150 % I_{Rated} for at least 60 seconds
Connections/tightening torque	Terminals	4 mm^2 (AWG12) / 0.5 Nm (4.4 in·lb)
Dimensions	W × H × D	105 × 315 × 144 mm (4.1 × 12.4 × 5.7 in)
Mass	m	3.5 kg (7.7 lb)

4.4.9 AC 230 V / 3-phase / size 2 / 5.5 … 7.5 kW (7.5… 10 HP)

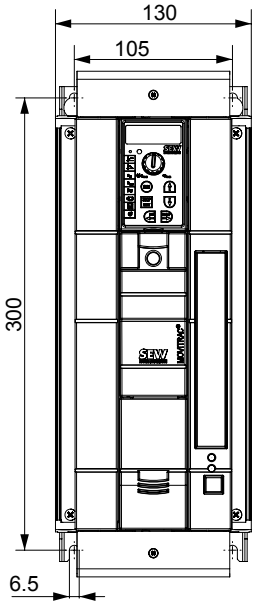

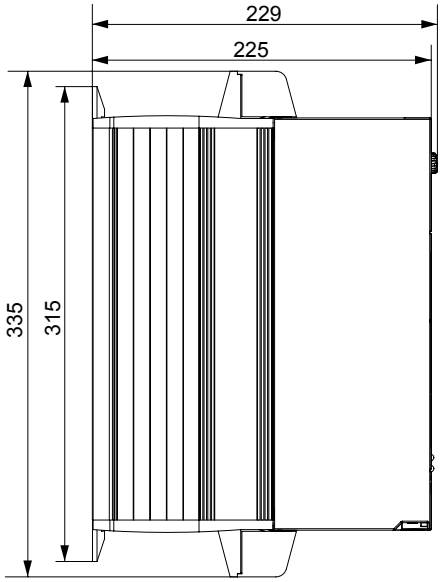

MOVITRAC® MC07B (3-phase mains) Part number		0055-2A3-4-00 828 507 1	0075-2A3-4-00 828 509 8
INPUT			
Permitted rated supply voltage	V_{Mains}	3 × AC 400 V V_{Mains} = AC 380 V – 10 %… AC 500 V + 10 %	
Rated supply frequency	f_{Mains}	50 / 60 Hz ± 5 %	
Rated mains current 100 % operation Rated mains current 125 % operation	I_{Mains} $I_{Mains\ 125}$	AC 19.5 A AC 24.4 A	AC 27.4 A AC 34.3 A
OUTPUT			
Output voltage	V_{Output}	3 × 0 ... V_{Mains}	
Recommended motor power 100 % operation Recommended motor power 125 % operation	P_{Mot} $P_{Mot\ 125}$	5.5 kW (7.5 HP) AC 7.5 kW (10 HP)	7.5 kW (10 HP) 11 kW (15 HP)
Rated output current 100 % operation Rated output current 125 % operation	I_{Rated} $I_{Rated\ 125}$	AC 22 A AC 27.5 A	AC 29 A AC 36.3 A
Apparent output power 100 % operation Apparent output power 125 % operation	S_{Rated} $S_{Rated\ 125}$	8.8 kVA 11.0 kVA	11.6 kVA 14.5 kVA
Minimum permitted braking resistance value (4 quadrant operation)	R_{Br_min}	12 Ω	
GENERAL INFORMATION			
Power loss 100 % operation Power loss 125 % operation	P_{Loss} $P_{Loss\ 125}$	300 W (0.402 HP) 375 W (0.503 HP)	380 W (0.510 HP) 475 W (0.637 HP)
Current limitation		150 % I_{Rated} for at least 60 seconds	
Connections/tightening torque	Terminals	4 mm^2 (AWG12) / 1.5 Nm (13.3 in·lb)	
Dimensions	W × H × D	130 × 335 × 229 mm (5.1 × 13.2 × 9.0 in)	
Mass	m	6.6 kg (14.6 lb)	

4.4.10 AC 230 V / 3-phase / size 3 / 11 … 15 kW (15… 20 HP)

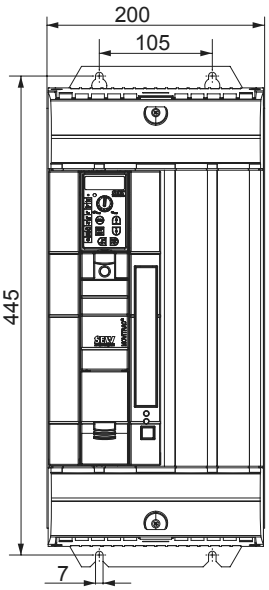

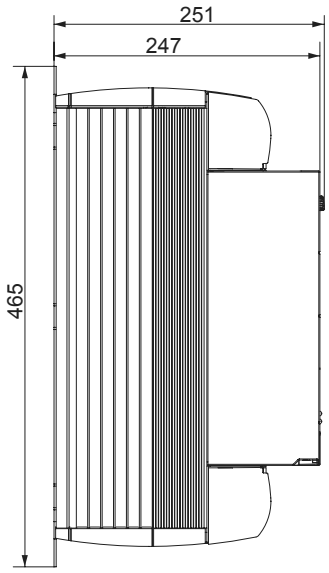

MOVITRAC® MC07B (3-phase mains) Part number		0110-203-4-00 828 510 1	0150-203-4-00 828 512 8
INPUT			
Permitted rated supply voltage	V_{Mains}	3 × AC 400 V V_{Mains} = AC 380 V – 10 %… AC 500 V + 10 %	
Rated supply frequency	f_{Mains}	50 / 60 Hz ± 5 %	
Rated mains current 100 % operation Rated mains current 125 % operation	I_{Mains} $I_{Mains\ 125}$	AC 40.0 A AC 50.0 A	AC 48.6 A AC 60.8 A
OUTPUT			
Output voltage	V_{Output}	3 × 0 ... V_{Mains}	
Recommended motor power 100 % operation Recommended motor power 125 % operation	P_{Mot} $P_{Mot\ 125}$	11 kW (15 HP) 15 kW (20 HP)	15 kW (20 HP) 22 kW (30 HP)
Rated output current 100 % operation Rated output current 125 % operation	I_{Rated} $I_{Rated\ 125}$	AC 42 A AC 52.5 A	AC 54 A AC 67.5 A
Apparent output power 100 % operation Apparent output power 125 % operation	S_{Rated} $S_{Rated\ 125}$	16.8 kVA 21.0 kVA	21.6 kVA 26.9 kVA
Minimum permitted braking resistance value (4 quadrant operation)	R_{Br_min}	7.5 Ω	5.6 Ω
GENERAL INFORMATION			
Power loss 100 % operation Power loss 125 % operation	P_{Loss} $P_{Loss\ 125}$	580 W (0.778 HP) 720 W (0.966 HP)	720 W (0.966 HP) 900 W (1.21 HP)
Current limitation		150 % I_{Rated} for at least 60 seconds	
Connections/tightening torque	Terminals	6 mm² / AWG10	10 mm² / AWG8
		3.5 Nm (31.0 in·lb)	
Dimensions	W × H × D	200 × 465 × 251 mm (7.9 × 18.3 × 9.9 in)	
Mass	m	15 kg (33.1 lb)	

4.4.11 AC 230 V / 3-phase / size 4 / 22 … 30 kW (30… 40 HP)

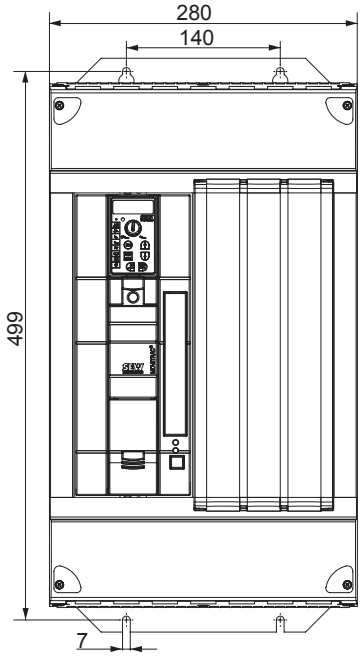

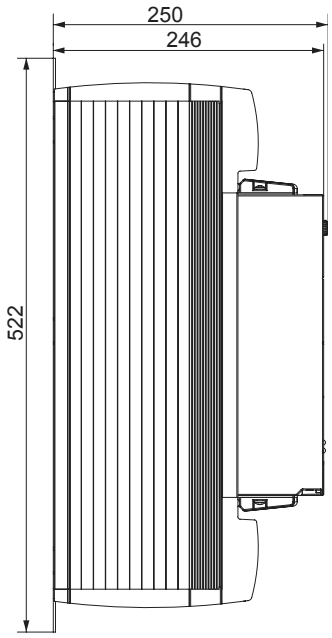

MOVITRAC® MC07B (3-phase mains) Part number		0220-203-4-00 828 513 6	0300-203-4-00 828 514 4
INPUT			
Permitted rated supply voltage	V_{Mains}	3 × AC 400 V V_{Mains} = AC 380 V – 10 %… AC 500 V + 10 %	
Rated supply frequency	f_{Mains}	50 / 60 Hz ± 5 %	
Rated mains current 100 % operation Rated mains current 125 % operation	I_{Mains} $I_{Mains\ 125}$	AC 72 A AC 90 A	AC 86 A AC 107 A
OUTPUT			
Output voltage	V_{Output}	3 × 0 ... V_{Mains}	
Recommended motor power 100 % operation Recommended motor power 125 % operation	P_{Mot} $P_{Mot\ 125}$	22 kW (30 HP) 30 kW (40 HP)	30 kW (40 HP) 37 kW (50 HP)
Rated output current 100 % operation Rated output current 125 % operation	I_{Rated} $I_{Rated\ 125}$	AC 80 A AC 100 A	AC 95 A AC 118.8 A
Apparent output power 100 % operation Apparent output power 125 % operation	S_{Rated} $S_{Rated\ 125}$	31.9 kVA 39.9 kVA	37.9 kVA 47.4 kVA
Minimum permitted braking resistance value (4 quadrant operation)	R_{Br_min}	3 Ω	
GENERAL INFORMATION			
Power loss 100 % operation Power loss 125 % operation	P_{Loss} $P_{Loss\ 125}$	1100 W (1.475 HP) 1400 W (1.877 HP)	1300 W (1.743 HP) 1700 W (2.280 HP)
Current limitation		150 % I_{Rated} for at least 60 seconds	
Connections/tightening torque	Terminals	25 mm² / AWG4	35 mm² / AWG2
		14 Nm (124 in·lb)	
Dimensions	W × H × D	280 × 522 × 250 mm (11.0 × 20.6 × 9.8 in)	
Mass	m	27 kg (59.5 lb)	

4.4.12 AC 400 / 500 V / 3-phase / size 0XS / 0.25… 0.37 kW (0.4… 0.5 HP)

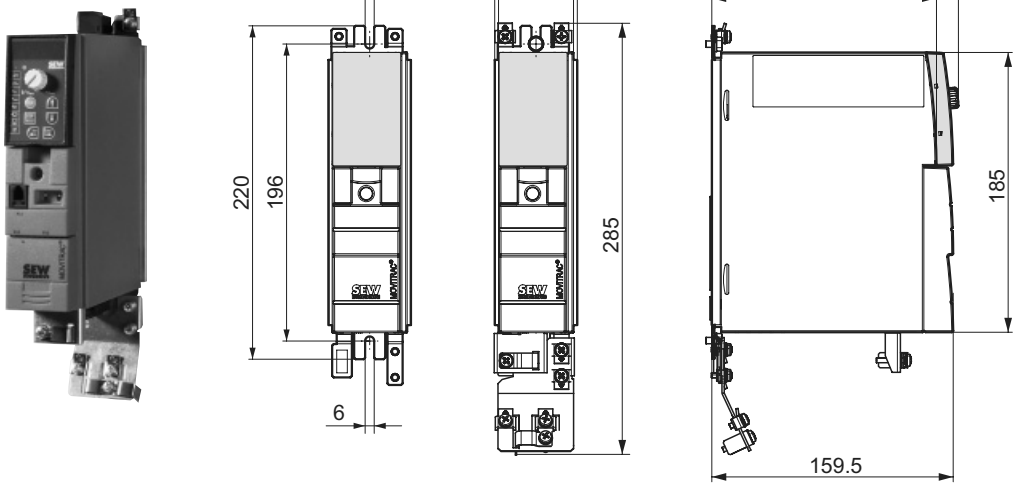

MOVITRAC® MC07BB (3-phase supply system) Part number		0003-5A3-4-00 828 515 2	0004-5A3-4-00 828 516 0
INPUT			
Permitted rated supply voltage	V_{Mains}	3 × AC 400 V V_{Mains} = AC 380 V – 10 %… AC 500 V + 10 %	
Rated supply frequency	f_{Mains}	50 / 60 Hz ± 5 %	
Rated mains current 100 % operation Rated mains current 125 % operation	I_{Mains} $I_{Mains\ 125}$	AC 0.9 A AC 1.1 A	AC 1.4 A AC 1.8 A
OUTPUT			
Output voltage	V_{Output}	3 × 0 ... V_{Mains}	
Recommended motor power 100 % operation Recommended motor power 125 % operation	P_{Mot} $P_{Mot\ 125}$	0.25 kW (0.4 HP) 0.37 kW (0.5 HP)	0.37 kW (0.5 HP) 0.55 kW (0.75 HP)
Rated output current 100 % operation Rated output current 125 % operation	I_{Rated} $I_{Rated\ 125}$	AC 1.0 A AC 1.3 A	AC 1.6 A AC 2.0 A
Apparent output power 100 % operation Apparent output power 125 % operation	S_{Rated} $S_{Rated\ 125}$	0.7 kVA 0.9 kVA	1.1 kVA 1.4 kVA
Minimum permitted braking resistance value (4 quadrant operation)	R_{Br_min}	68 Ω	
GENERAL INFORMATION			
Power loss 100 % operation Power loss 125 % operation	P_{Loss} $P_{Loss\ 125}$	30 W (0.040 HP) 35 W (0.047 HP)	35 W (0.047 HP) 40 W (0.054 HP)
Current limitation		150 % I_{Rated} for at least 60 seconds	
Connections/tightening torque	Terminals	4 mm^2 (AWG12) / 0.5 Nm (4.4 in·lb)	
Dimensions	W × H × D	54.5 × 185 × 163.5 mm (2.0 × 7.3 × 6.4 in)	
Mass	m	1.3 kg (2.9 lb)	

4.4.13 AC 400 / 500 V / 3-phase / size 0S / 0.55 ... 1.5 kW (0.75... 2.0 HP)

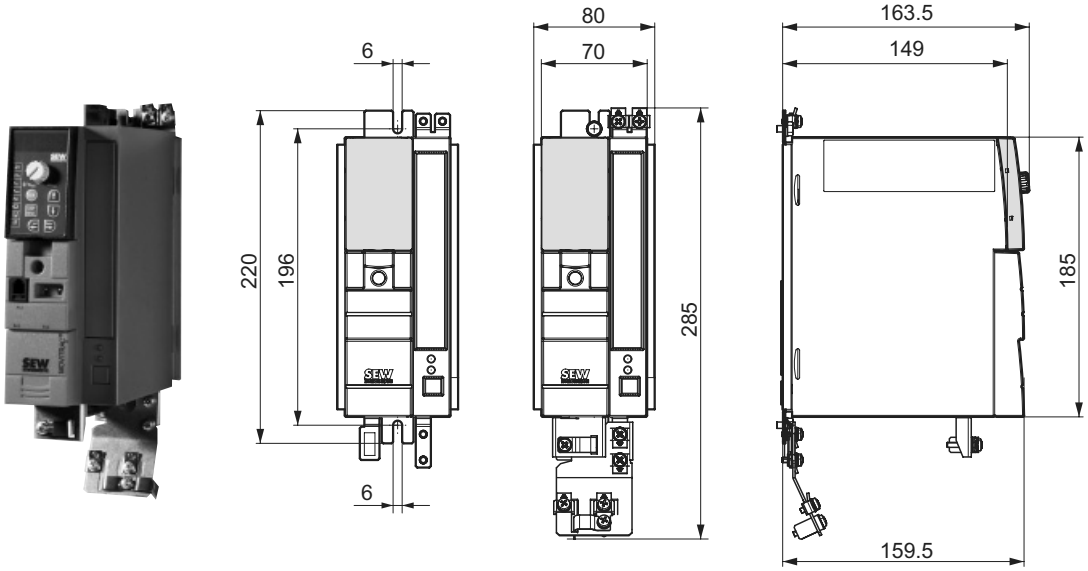

MOVITRAC® MC07B (3-phase mains)		0005-5A3-4-x0	0008-5A3-4-x0	0011-5A3-4-x0	0015-5A3-4-x0
Part number, standard unit (-00) **Part number "Safe stop" (-S0)**		**828 517 9** **828 995 6**	**828 518 7** **828 996 4**	**828 519 5** **828 997 2**	**828 520 9** **828 998 0**
INPUT					
Permitted rated supply voltage	V_{Mains}	3 × AC 400 V V_{Mains} = AC 380 V – 10 %… AC 500 V + 10 %			
Rated supply frequency	f_{Mains}	50 / 60 Hz ± 5 %			
Rated mains current 100 % operation Rated mains current 125 % operation	I_{Mains} $I_{Mains\ 125}$	AC 1.8 A AC 2.3 A	AC 2.2 A AC 2.6 A	AC 2.8 A AC 3.5 A	AC 3.6 A AC 4.5 A
OUTPUT					
Output voltage	V_{Output}	3 × 0 ... V_{Mains}			
Recommended motor power 100 % oper. Recommended motor power 125 % oper.	P_{Mot} $P_{Mot\ 125}$	0.55 kW (0.75 HP) 0.75 kW (1.0 HP)	0.75 kW (1.0 HP) 1.1 kW (1.5 HP)	1.1 kW (1.5 HP) 1.5 kW (2.0 HP)	1.5 kW (2.0 HP) 2.2 kW (3.0 HP)
Rated output current 100 % operation Rated output current 125 % operation	I_{Rated} $I_{Rated\ 125}$	AC 2.0 A AC 2.5 A	AC 2.4 A AC 3.0 A	AC 3.1 A AC 3.9 A	AC 4.0 A AC 5.0 A
Apparent output power 100 % operation Apparent output power 125 % operation	S_{Rated} $S_{Rated\ 125}$	1.4 kVA 1.7 kVA	1.7 kVA 2.1 kVA	2.1 kVA 2.7 kVA	2.8 kVA 3.5 kVA
Minimum permitted braking resistance value (4 quadrant operation)	R_{Br_min}	68 Ω			
GENERAL INFORMATION					
Power loss 100 % operation Power loss 125 % operation	P_{Loss} $P_{Loss\ 125}$	40 W (0.054 HP) 45 W (0.060 HP)	45 W (0.060 HP) 50 W (0.067 HP)	50 W (0.067 HP) 60 W (0.080 HP)	60 W (0.080 HP) 75 W (0.10 HP)
Current limitation		150 % I_{Rated} for at least 60 seconds			
Connections/tightening torque	Terminals	4 mm^2 (AWG12) / 0.5 Nm (4.4 in·lb)			
Dimensions	W × H × D	80 × 185 × 163.5 mm (3.1 × 7.3 × 6.4 in)			
Mass	m	1.5 kg (3.3 lb)			

4.4.14 AC 400 / 500 V / 3-phase / size 0L / 2.2… 4.0 kW (3.0... 5.0 HP)

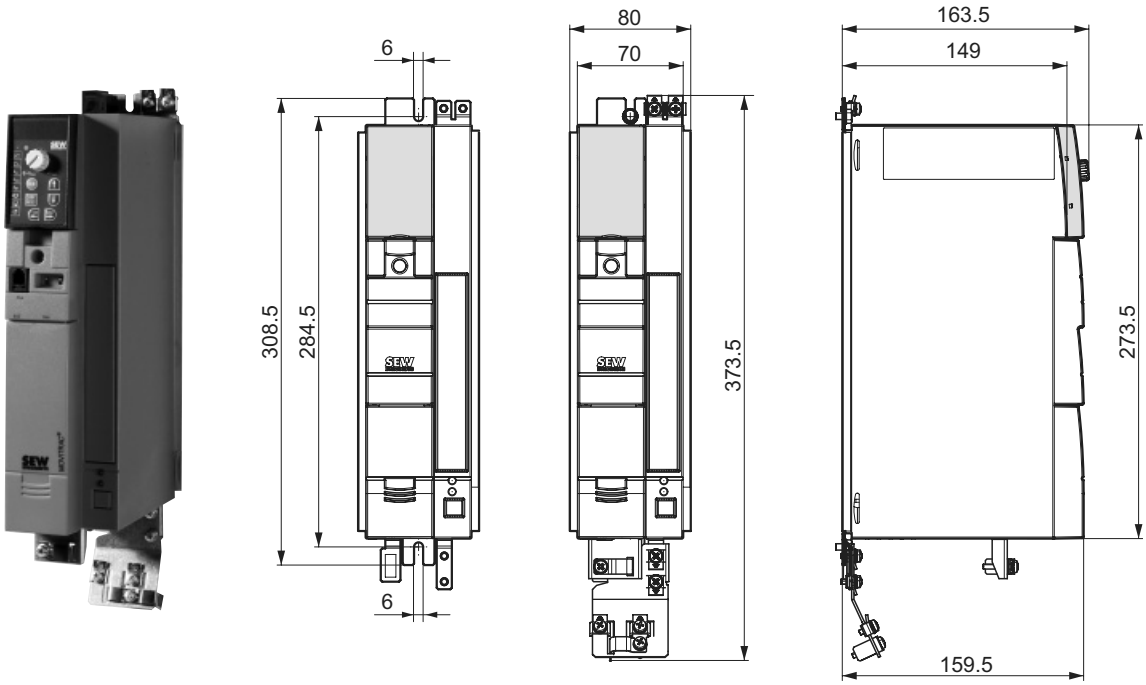

MOVITRAC® MC07B (3-phase mains)		0022-5A3-4-x0	0030-5A3-4-x0	0040-5A3-4-x0
Part number, standard unit (-00) **Part number "Safe stop" (-S0)**		**828 521 7** **828 999 9**	**828 522 5** **829 000 8**	**828 523 3** **829 001 6**
INPUT				
Permitted rated supply voltage	V_{Mains}	3 × AC 400 V V_{Mains} = AC 380 V – 10 %… AC 500 V + 10 %		
Rated supply frequency	f_{Mains}	50 / 60 Hz ± 5 %		
Rated mains current 100 % operation Rated mains current 125 % operation	I_{Mains} $I_{Mains\ 125}$	AC 5.0 A AC 6.2 A	AC 6.3 A AC 7.9 A	AC 8.6 A AC 10.7 A
OUTPUT				
Output voltage	V_{Output}	3 × 0 ... V_{Mains}		
Recommended motor power 100 % operation Recommended motor power 125 % operation	P_{Mot} $P_{Mot\ 125}$	2.2 kW (3.0 HP) 3.0 kW (4.0 HP)	3.0 kW (4.0 HP) 4.0 kW (5.0 HP)	4.0 kW (5.0 HP) 5.5 kW (7.5 HP)
Rated output current 100 % operation Rated output current 125 % operation	I_{Rated} $I_{Rated\ 125}$	AC 5.5 A AC 6.9 A	AC 7.0 A AC 8.8 A	AC 9.5 A AC 11.9 A
Apparent output power 100 % operation Apparent output power 125 % operation	S_{Rated} $S_{Rated\ 125}$	3.8 kVA 4.8 kVA	4.8 kVA 6.1 kVA	6.6 kVA 8.2 kVA
Minimum permitted braking resistance value (4 quadrant operation)	R_{Br_min}	68 Ω		
GENERAL INFORMATION				
Power loss 100 % operation Power loss 125 % operation	P_{Loss} $P_{Loss\ 125}$	80 W (0.11 HP) 95 W (0.13 HP)	95 W (0.13 HP) 120 W (0.161 HP)	125 W (0.168 HP) 180 W (0.241 HP)
Current limitation		150 % I_{Rated} for at least 60 seconds		
Connections/tightening torque	Terminals	4 mm^2 (AWG12) / 0.5 Nm (4.4 in·lb)		
Dimensions	W × H × D	80 × 273.5 × 163.5 mm (3.1 × 10.8 × 6.4 in)		
Mass	m	2.1 kg (4.6 lb)		

4.4.15 AC 400 / 500 V / 3-phase / size 2S / 5.5… 7.5 kW (7.5 ... 10 HP)

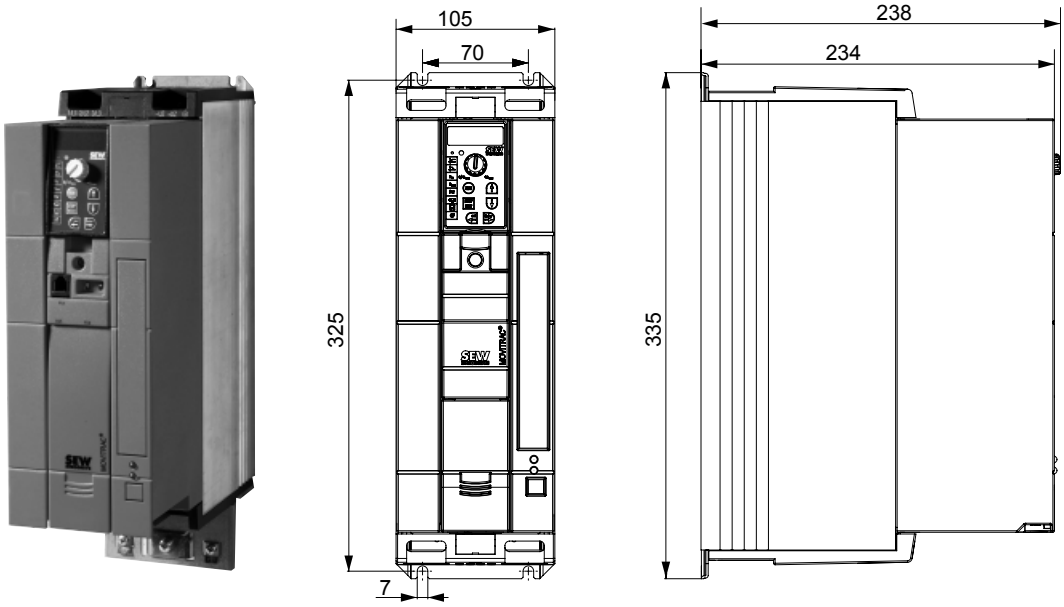

MOVITRAC® MC07B (3-phase supply system) Part number		0055-5A3-4-00 828 524 1	0075-5A3-4-00 828 526 8
INPUT			
Permitted rated supply voltage	V_{Mains}	3 × AC 400 V V_{Mains} = AC 380 V – 10 %… AC 500 V + 10 %	
Rated supply frequency	f_{Mains}	50 / 60 Hz ± 5 %	
Rated mains current 100 % operation Rated mains current 125 % operation	I_{Mains} $I_{Mains\ 125}$	AC 11.3 A AC 14.1 A	AC 14.4 A AC 18.0 A
OUTPUT			
Output voltage	V_{Output}	3 × 0 ... V_{Mains}	
Recommended motor power 100 % operation Recommended motor power 125 % operation	P_{Mot} $P_{Mot\ 125}$	5.5 kW (7.5 HP) 7.5 kW (10 HP)	7.5 kW (10 HP) 11 kW (15 HP)
Rated output current 100 % operation Rated output current 125 % operation	I_{Rated} $I_{Rated\ 125}$	AC 12.5 A AC 15.6 A	AC 16 A AC 20 A
Apparent output power 100 % operation Apparent output power 125 % operation	S_{Rated} $S_{Rated\ 125}$	8.7 kVA 10.8 kVA	11.1 kVA 13.9 kVA
Minimum permitted braking resistance value (4 quadrant operation)	R_{Br_min}	47 Ω	
GENERAL INFORMATION			
Power loss 100 % operation Power loss 125 % operation	P_{Loss} $P_{Loss\ 125}$	220 W (0.295 HP) 290 W (0.389 HP)	290 W (0.389 HP) 370 W (0.496 HP)
Current limitation		150 % I_{Rated} for at least 60 seconds	
Connections/tightening torque	Terminals	4 mm^2 (AWG12) / 1.5 Nm (13.3 in·lb)	
Dimensions	W × H × D	105 × 335 × 238 mm (4.1 × 13.2 × 9.4 in)	
Weight	m	5.0 kg (11.0 lb)	

4.4.16 AC 400 / 500 V / 3-phase / size 2 / 11 kW (15 HP)

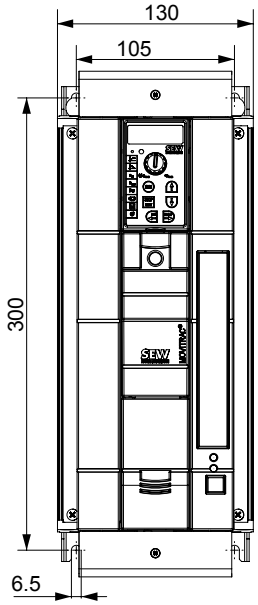

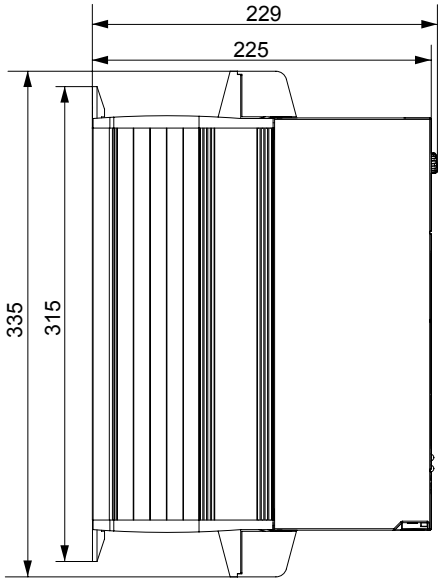

MOVITRAC® MC07B (3-phase supply system) **Part number**		**0110-5A3-4-00** **828 527 6**
INPUT		
Permitted rated supply voltage	V_{Mains}	3 × AC 400 V V_{Mains} = AC 380 V – 10 %… AC 500 V + 10 %
Rated supply frequency	f_{Mains}	50 / 60 Hz ± 5 %
Rated mains current 100 % operation Rated mains current 125 % operation	I_{Mains} $I_{Mains\ 125}$	AC 21.6 A AC 27.0 A
OUTPUT		
Output voltage	V_{Output}	3 × 0 ... V_{Mains}
Recommended motor power 100 % operation Recommended motor power 125 % operation	P_{Mot} $P_{Mot\ 125}$	11 kW (15 HP) 15 kW (20 HP)
Rated output current 100 % operation Rated output current 125 % operation	I_{Rated} $I_{Rated\ 125}$	AC 24 A AC 30 A
Apparent output power 100 % operation Apparent output power 125 % operation	S_{Rated} $S_{Rated\ 125}$	16.6 kVA 20.8 kVA
Minimum permitted braking resistance value (4 quadrant operation)	R_{Br_min}	22 Ω
GENERAL INFORMATION		
Power loss 100 % operation Power loss 125 % operation	P_{Loss} $P_{Loss\ 125}$	400 W (0.536 HP) 500 W (0.671 HP)
Current limitation		150 % I_{Rated} for at least 60 seconds
Connections/tightening torque	Terminals	4 mm^2 (AWG12) / 1.5 Nm (13.3 in·lb)
Dimensions	W × H × D	130 × 335 × 229 mm (5.1 × 13.2 × 9.0 in)
Weight	m	6.6 kg (14.6 lb)

4.4.17 AC 400 / 500 V / 3-phase / size 3 / 15… 30 kW (20... 40 HP)

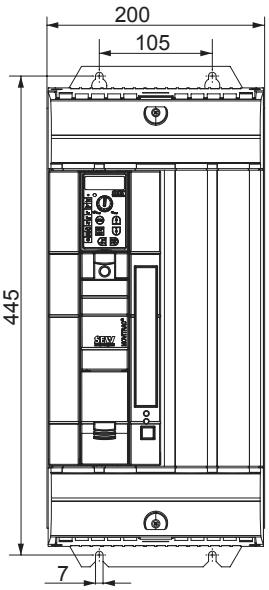

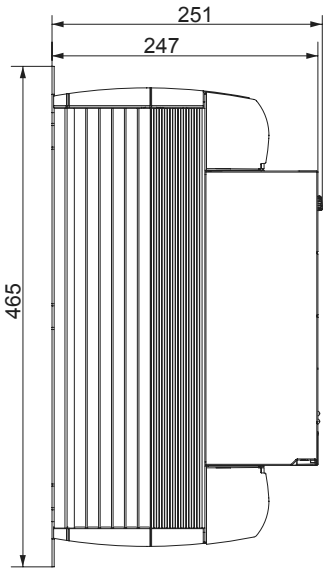

MOVITRAC® MC07B (3-phase supply system) Part number		0150-503-4-00 828 528 4	0220-503-4-00 828 529 2	0300-503-4-00 828 530 6
INPUT				
Permitted rated supply voltage	V_{Mains}	3 × AC 400 V V_{Mains} = AC 380 V – 10 %… AC 500 V + 10 %		
Rated supply frequency	f_{Mains}	50 / 60 Hz ± 5 %		
Rated mains current 100 % operation Rated mains current 125 % operation	I_{Mains} $I_{Mains\ 125}$	AC 28.8 A AC 36.0 A	AC 41.4 A AC 51.7 A	AC 54.0 A AC 67.5 A
OUTPUT				
Output voltage	V_{Output}	3 × 0 ... V_{Mains}		
Recommended motor power 100 % operation Recommended motor power 125 % operation	P_{Mot} $P_{Mot\ 125}$	15 kW (20 HP) 22 kW (30 HP)	22 kW (30 HP) 30 kW (40 HP)	30 kW (40 HP) 37 kW (50 HP)
Rated output current 100 % operation Rated output current 125 % operation	I_{Rated} $I_{Rated\ 125}$	AC 32 A AC 40 A	AC 46 A AC 57.5 A	AC 60 A AC 75 A
Apparent output power 100 % operation Apparent output power 125 % operation	S_{Rated} $S_{Rated\ 125}$	22.2 kVA 27.7 kVA	31.9 kVA 39.8 kVA	41.6 kVA 52.0 kVA
Minimum permitted braking resistance value (4 quadrant operation)	R_{Br_min}	15 Ω		12 Ω
GENERAL INFORMATION				
Power loss 100 % operation Power loss 125 % operation	P_{Loss} $P_{Loss\ 125}$	550 W (0.738 HP) 690 W (0.925 HP)	750 W (1.01 HP) 940 W (1.26 HP)	950 W (1.27 HP) 1250 W (1.676 HP)
Current limitation		150 % I_{Rated} for at least 60 seconds		
Connections/tightening torque	Terminals	6 mm² / AWG10	10 mm² / AWG8	16 mm² / AWG6
		3.5 Nm (31.0 in·lb)		
Dimensions	W × H × D	200 × 465 × 251 mm (7.9 × 18.3 × 9.9 in)		
Weight	m	15 kg (33.1 lb)		

4.4.18 AC 400 / 500 V / 3-phase / size 4 / 37… 45 kW (50... 60 HP)

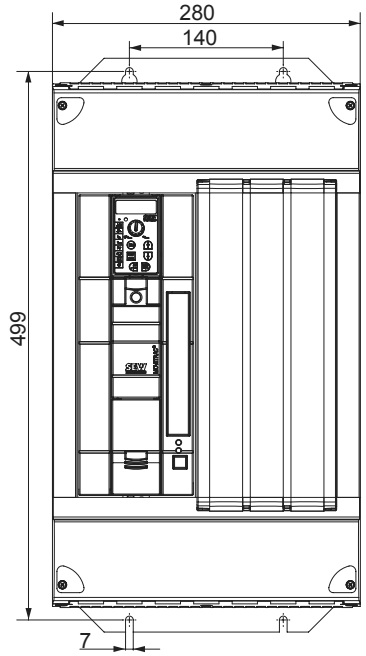

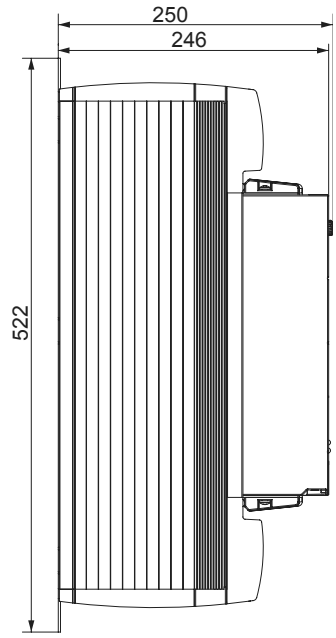

MOVITRAC® MC07B (3-phase supply system) Part number		0370-503-4-00 828 531 4	0450-503-4-00 828 532 2
INPUT			
Permitted rated supply voltage	V_{Mains}	3 × AC 400 V V_{Mains} = AC 380 V – 10 %… AC 500 V + 10 %	
Rated supply frequency	f_{Mains}	50 / 60 Hz ± 5 %	
Rated mains current 100 % operation Rated mains current 125 % operation	I_{Mains} $I_{Mains\ 125}$	AC 65.7 A AC 81.9 A	AC 80.1 A AC 100.1 A
OUTPUT			
Output voltage	V_{Output}	3 × 0 ... V_{Mains}	
Recommended motor power 100 % operation Recommended motor power 125 % operation	P_{Mot} $P_{Mot\ 125}$	37 kW (50 HP) 45 kW (60 HP)	45 kW (60 HP) 55 kW (75 HP)
Rated output current 100 % operation Rated output current 125 % operation	I_{Rated} $I_{Rated\ 125}$	AC 73 A AC 91.3 A	AC 89 A AC 111.3 A
Apparent output power 100 % operation Apparent output power 125 % operation	S_{Rated} $S_{Rated\ 125}$	50.6 kVA 63.2 kVA	61.7 kVA 77.1 kVA
Minimum permitted braking resistance value (4 quadrant operation)	R_{Br_min}	6 Ω	
GENERAL INFORMATION			
Power loss 100 % operation Power loss 125 % operation	P_{Loss} $P_{Loss\ 125}$	1200 W (1.609 HP) 1450 W (1.944 HP)	1400 W (1.877 HP) 1820 W (2.441 HP)
Current limitation		150 % I_{Rated} for at least 60 seconds	
Connections/tightening torque	Terminals	25 mm² / AWG4	35 mm² / AWG2
		14 Nm (124 in·lb)	
Dimensions	W × H × D	280 × 522 × 250 mm (11.0 × 20.6 × 9.8 in)	
Mass	m	27 kg (59.5 lb)	

4.4.19 AC 400 / 500 V / 3-phase / size 5 / 55… 75 kW (75… 100 HP)

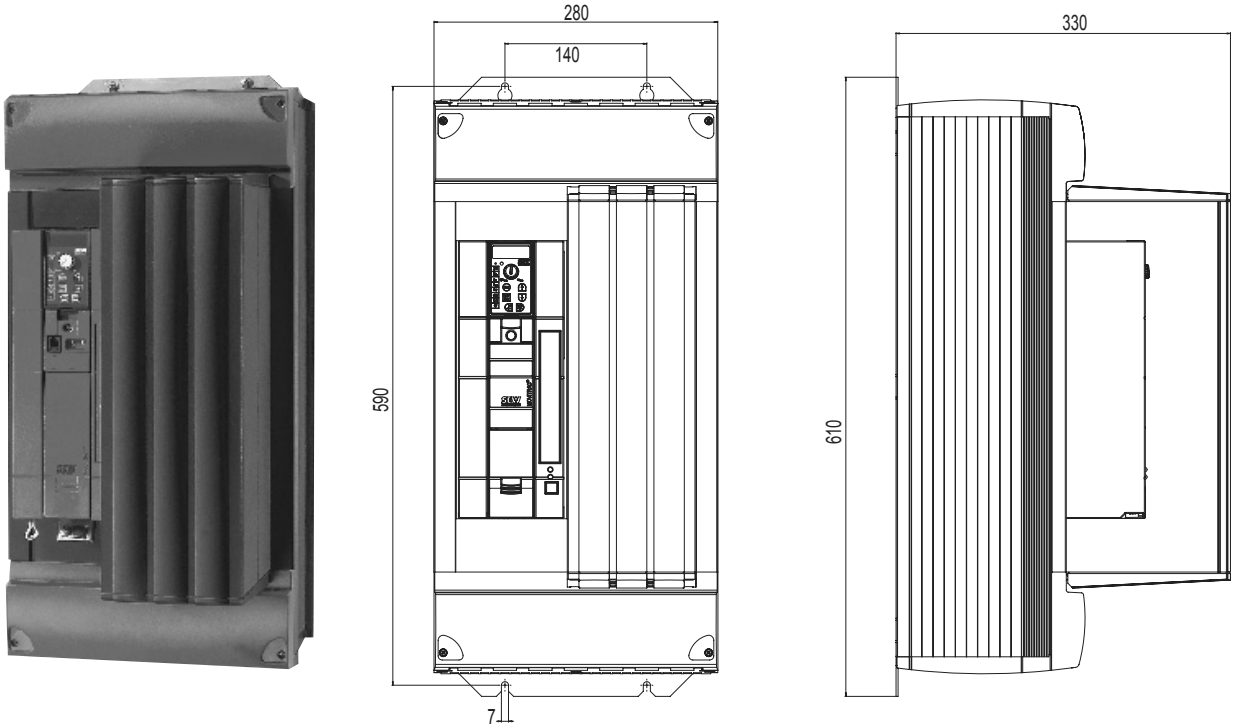

MOVITRAC® MC07B (3-phase mains) Part number		0550-503-4-00 829 527 1	0750-503-4-00 829 529 8
INPUT			
Permitted rated supply voltage	V_{Mains}	3 × AC 400 V V_{Mains} = AC 380 V – 10 %… AC 500 V + 10 %	
Rated supply frequency	f_{Mains}	50 / 60 Hz ± 5 %	
Rated mains current 100 % operation Rated mains current 125 % operation	I_{Mains} $I_{Mains\ 125}$	AC 94.5 A AC 118.1 A	AC 117 A AC 146.3 A
OUTPUT			
Output voltage	V_{Output}	3 × 0 ... V_{Mains}	
Recommended motor power 100 % operation Recommended motor power 125 % operation	P_{Mot} $P_{Mot\ 125}$	55 kW (75 HP) 75 kW (100 HP)	75 kW (100 HP) 90 kW (120 HP)
Rated output current 100 % operation Rated output current 125 % operation	I_{Rated} $I_{Rated\ 125}$	AC 105 A AC131 A	AC 130 A AC 162 A
Apparent output power 100 % operation Apparent output power 125 % operation	S_{Rated} $S_{Rated\ 125}$	73.5 kVA 90.8 kVA	91.0 kVA 112.2 kVA
Minimum permitted braking resistance value (4 quadrant operation)	R_{Br_min}	6 Ω	4 Ω
GENERAL INFORMATION			
Power loss 100 % operation Power loss 125 % operation	P_{Loss} $P_{Loss\ 125}$	1700 W (2.280 HP) 2020 W (2.709 HP)	2000 W (2.682 HP) 2300 W (3.084 HP)
Current limitation		150 % I_{Rated} for at least 60 seconds	
Connections/tightening torque	Terminals	35 mm^2 / AWG2	50 mm^2 / AWG0
		14 Nm (124 in·lb)	
Dimensions	W × H × D	280 × 610 × 330 mm (11.0 × 24.0 × 13.0 in)	
Mass	m	35 kg (77.2 lb)	

4.5 FBG11B keypad front option

The FBG11B front option can be used for simple diagnostics and startup.

Part number	1820 635 2
Functions	• Displaying process values and status • Fault memory queries and fault reset • Displaying and setting parameters • Back up and transfer of parameter sets • Easy-to-use startup menu for SEW and non-SEW motors • Manual control of MOVITRAC® B
Features	• 5-digit, 7-segment display / 6 buttons / 8 icons / setpoint control module • Selection of short or long menu • Can be plugged onto the inverter (during operation) • Enclosure IP20 (EN 60529)

4.6 FSC11B communication module

The FSC11B communication module enables communication with other units. These may include: PC, operator terminals, MOVITRAC® or MOVIDRIVE®.

Part number: 1820 716 2

Functions:
- Communication with PLC / MOVITRAC® B / MOVIDRIVE® / PC
- Operation/parameter setting/service (PC)
- The options FSC11B and FIO11B are installed at the same fastening place and therefore cannot be used simultaneously

Features:
- RS-485 (one interface): Plug-in terminals and service interface (RJ10 socket)
- CAN-based system bus (SBus) (plug-in terminals)
- Supported protocols: MOVILINK® / SBus / RS-485 / CANopen

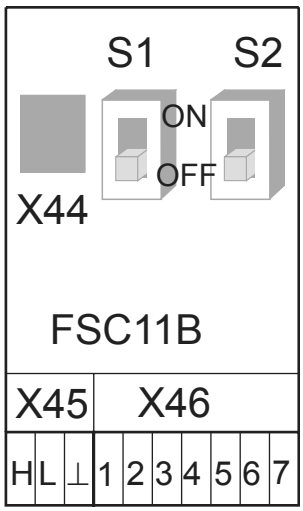

Function	Terminal	Description	Data
System bus (SBus)	X46:1 X46:2 X46:3 X46:4 X46:5 X46:6 X46:7	SC11: SBus high SC12: SBus low GND: Reference potential SC21: SBus high SC22: SBus low GND: Reference potential 24VIO: Auxiliary voltage / external voltage supply	CAN bus to CAN specification 2.0, parts A and B, transmission technology to ISO 11898, max. 64 participants, terminating resistor (120 Ω) can be activated using DIP switches Terminal cross-section: 1.5 mm^2 (AWG15) without conductor end sleeves 1.0 mm^2 (AWG17) with conductor end sleeves
RS-485 interface	X45:H X45:L X45:⊥	ST11: RS-485+ ST12: RS-485– GND: Reference potential	EIA standard, 9.6 kbaud, max. 32 participants Maximum cable length 200 m (656 ft) Dynamic terminating resistor with fixed installation Terminal cross-section: – 1.5 mm^2 (AWG15) without conductor end sleeves – 1.0 mm^2 (AWG17) with conductor end sleeves
Service interface	X44 RJ10		Only for service purposes, exclusively for point-to-point connection Maximum cable length 3 m (10 ft)

4.7 FIO11B analog module

Part number 1820 637 9

4.7.1 Description

The FIO11B analog module adds the following interfaces to the basic version:

- Setpoint input
- Analog output
- RS-485 interface
- The options FIO11B and FSC11B are mounted on the same fastening place and therefore cannot be used simultaneously.

4.7.2 Electronics data FIO11B analog module

Function	Terminal	Description	Data
Setpoint input[1)]	X40:1 X40:2	AI2: Voltage input GND: Reference potential	–10 ... +10 V R_i > 40 kΩ Resolution 10 bit Sampling time 5 ms
Analog output/ alternative as current output or voltage output	X40:3 X40:4 X40:5	GND: Reference potential AOV1: Voltage output AOC1: Current output	0 ... +10 V / I_{max} = 2 mA 0 (4) ... 20 mA Resolution 10 bit Sampling time 5 ms Short-circuit proof, protected against external voltage up to 30 V
RS-485 interface	X45:H X45:L X45:⊥	ST11: RS-485+ ST12: RS-485– GND: Reference potential	EIA standard, 9.6 kbaud, max. 32 participants Maximum cable length 200 m (656 ft) Dynamic terminating resistor with fixed installation Terminal cross-section: – 1.5 mm^2 (AWG15) without conductor end sleeves – 1.0 mm^2 (AWG17) with conductor end sleeves
Service interface	X44 RJ10		Only for service purposes, exclusively for point-to-point connection Maximum cable length 5 m (16.5 ft)

1) If the setpoint input is not used, it should be set to GND. Otherwise a measured input voltage of –1... +1 V is set.

4.8 DBG60B keypad (in preparation)

4.8.1 Description

The basic version of MOVITRAC® B does not have a DBG60B keypad but has the option of an upgrade to include the plain text keypad.

Keypad		Language	Part number
	DBG60B-01	DE / EN / FR / IT / ES / PT / NL (German / English / French / Italian / Spanish / Portuguese / Dutch)	1 820 403 1
	DBG60B-02	DE / EN / FR / FI / SV / DA / TR (German / English / French / Finnish / Swedish / Danish / Turkish)	1 820 405 8
	DBG60B-03	DE / EN / FR / RU / PL / CS (German / English / French / Russian / Polish / Czech)	1 820 406 6
	DBG60B-04	DE / EN / FR / ZH (German / English / French / Chinese)	1 820 850 9
	Door installation set[1)]	**Description (= scope of delivery)**	**Part number**
	DBM60B	• Housing for DBG60B (IP65) • DKG60B extension cable, length 5 m (16.5 ft)	824 853 2
	Extension cable	**Description (= scope of delivery)**	**Part number**
	DKG60B	• Length 5 m (16.5 ft) • 4-core, shielded cable (AWG26)	817 583 7

1) The DBG60B keypad is not included in the scope of delivery and must be ordered separately.

4.8.2 Functions

- Display process values and status
- Status displays of the binary inputs / outputs
- Error memory and error reset queries
- Option to display and set the operating parameters and service parameters
- Data backup and transfer of parameter sets to other MOVITRAC® B units.
- User-friendly startup menu
- Manual control of MOVITRAC® B
- Connection via FSC11B (is required)

4.8.3 Features

- Illuminated text display, choice of 7 languages
- Keypad with 21 keys
- Can be connected via extension cable DKG60B (5 m [16.5 ft])
- Enclosure IP40 (EN 60529)

	NOTE
	The DBG60B keypad option is connected to the FSC11B or FIO11B communication front option. Simultaneous operation of DBG60B and PC, RS-485 connection, MOVIDRIVE®, or MOVITRAC® is not possible.

4.8.4 Dimension drawing for DBG60B

DBG60B dimension drawing, dimensions in mm

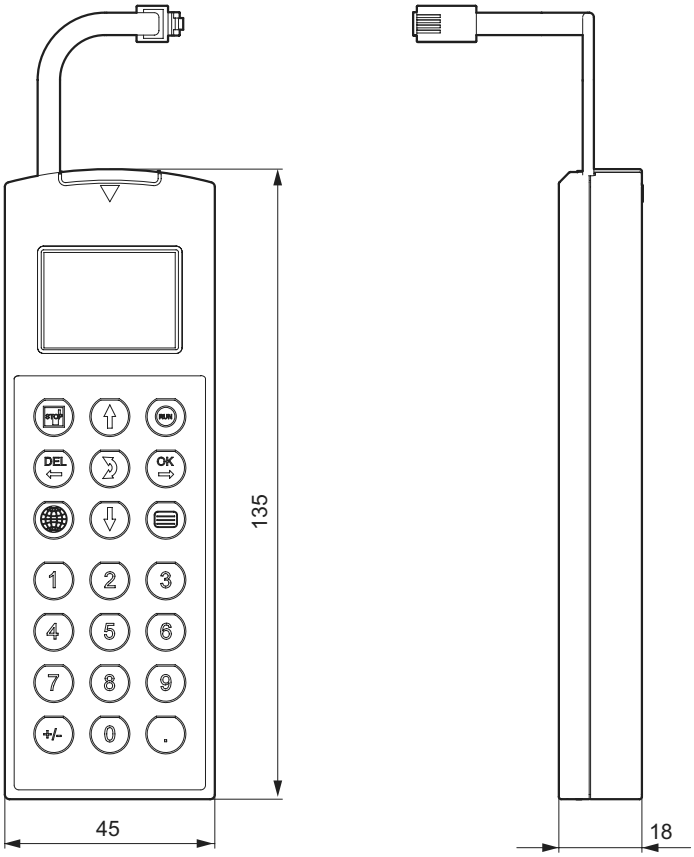

4.8.5 DBG60B housing dimension drawing

The DBM60B option can be used to mount the keypad DBG60B close to the inverter (e.g. in the control cabinet door). The DBM60B option consists of housing in enclosure IP65 and a 5 m (16.5 ft) DKG60B extension cable.

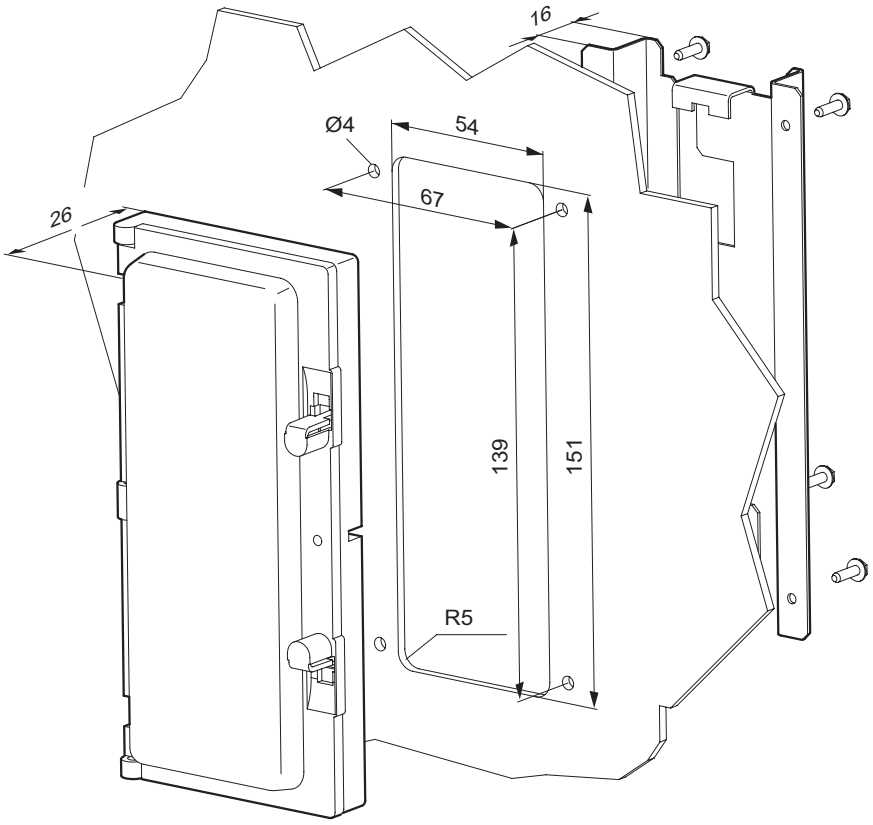

4.9 Parameter module UBP11A

Part number: 823 933 9

Functional description:

- Saving data from the inverter to the parameter module
- Loading data back from the parameter module to the inverter
- Operating status display
- The UBP11A parameter module requires the front option FSC11B or FIO11B. Simultaneous operation of UBP11A and PC, RS-485 connection, MOVIDRIVE®, or MOVITRAC® is not possible.

4.10 MBG11A setpoint control module

Functional description:

- The MBG11A setpoint control module has two keys and a display. They make it possible to adjust the speed remotely in the range from –100 % ... +100 % f_{max} (potentiometer f1).
- Up to 31 MOVITRAC® B units can be controlled at the same time (broadcasting).
- The MBG11A setpoint control module requires the front option FSC11B or FIO11B.

Technical data:

MBG11A option	
Part number	822 547 8
Input voltage	DC 24 V ± 25 %
Current consumption	approx. 70 mA
Setpoint resolution	1 %
Serial interface[1)]	RS-485 for connecting max. 31 MOVIMOT® inverters (max. 200 m [656 ft], 9600 baud)
Enclosure	IP 65
Ambient temperature	–15 ... 60 °C (5 ... 140 °F)

1) with integrated dynamic terminating resistor

Dimensions and connection assignment:

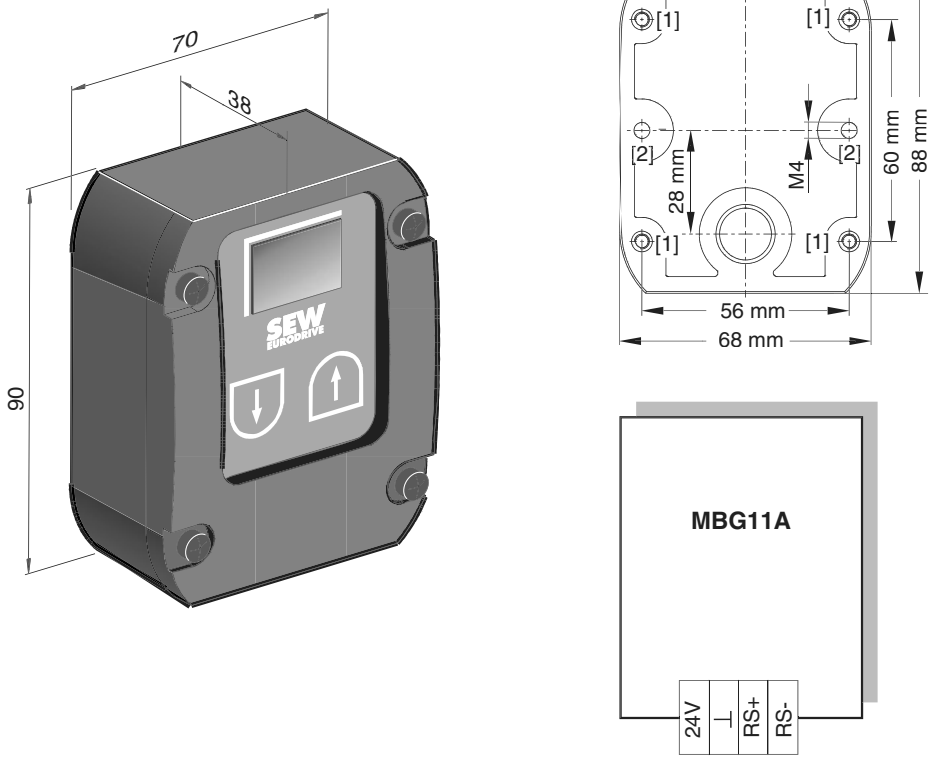

[1] Tapped hole on the rear
[2] Retaining holes for M4 screws

4.11 UWS11A Interface adapter RS-232 / RS-485 for support rail

Part number	822 689 X	**The FSC11B is required for connecting the UWS11A.**
Ambient temperature	0 ... 40 °C (32 .. 104 °F)	
Enclosure	IP20	
Description	The UWS11A option converts RS-232 signals, for example from the PC, into RS-485 signals. These RS-485 signals can then be routed to the RS-485 interface of the MOVITRAC® B. The UWS11A option requires a 24V DC voltage supply (I_{max} = DC 100 mA).	
RS-232 interface	The connection between UWS11A and PC is made using a commercially available serial interface cable (shielded!).	
RS-485 interface	You can use the RS485 interface of the UWS11A to network up to 32 MOVITRAC® B units for communication (max. total cable length 200 m [656 ft]). Do not connect external terminating resistors because dynamic terminating resistors are already installed. Permitted cable cross-section: One core per terminal 0.20...2.5 mm² (AWG 24...12) Two cores per terminal 0.20...1 mm² (AWG 24...17)	

Dimension drawing

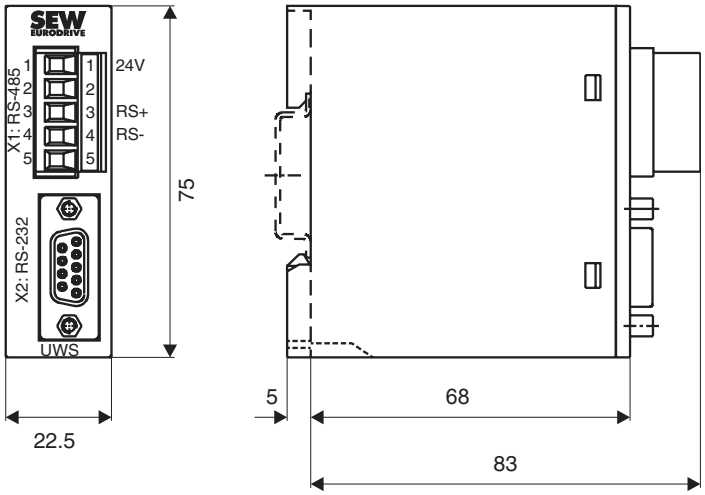

The UWS11A option is mounted on a mounting rail (EN 50022-35 × 7.5) in the switch cabinet.

4.12 UWS21B RS-232/RS-485 interface adapter

Part number	18204562 **The FSC11B is required for connecting the UWS21B.**
Ambient temperature	0... 40 °C (32 .. 104 °F)
Enclosure	IP20
Description	The UWS21B option converts RS-232 signals, for example from the PC, into RS-485 signals. These RS-485 signals can then be routed to the interface of the MOVITRAC® B.
RS-232 interface	The UWS21B – PC connection is made using a standard serial interface cable (shielded).
RS-485 interface	UWS21B and MOVITRAC® B are connected using a serial interface cable with RJ10 connectors.
Scope of delivery	The scope of delivery for the UWS21B option includes: • UWS21B unit • Serial interface cable with 9-pin sub D socket and 9-pin sub D connector to connect the UWS21B option to the PC • Serial interface cable with two RJ10 connectors to connect UWS21B and MOVITRAC® B • CD-ROM with drivers and MOVITOOLS® MotionStudio
UWS21B dimension drawing	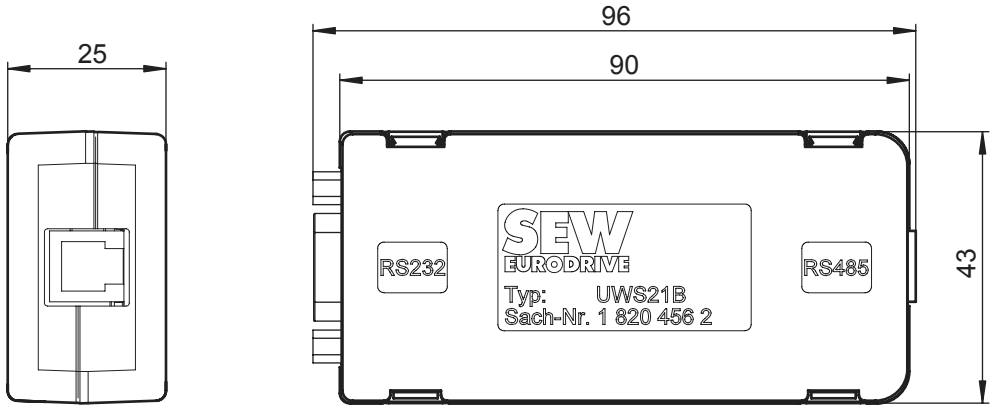

4.13 USB11A USB/RS-485 interface adapter

Part number	824 831 1	**The FSC11B is required for connecting the USB11A.**
Ambient temperature	0 ... 40 °C (32 .. 104 °F)	
Enclosure	IP20	
Description	Option USB11A enables a PC or laptop with a USB interface to be connected to the X44 interface of MOVITRAC®. The USB11A interface adapter supports USB 1.1 and USB 2.0.	
RS-232 interface	The connection between USB11A and PC is made using a commercial standard USB cable type USB A-B (shielded!).	
Scope of delivery	The scope of delivery for the USB11A option includes: • USB11A unit • USB connection cable type USB A-B to connect PC to USB11A • Serial interface cable with two RJ11 connectors to connect MOVITRAC® B and USB11A. • CD-ROM with drivers and MOVITOOLS® MotionStudio.	
USB11A dimension drawing	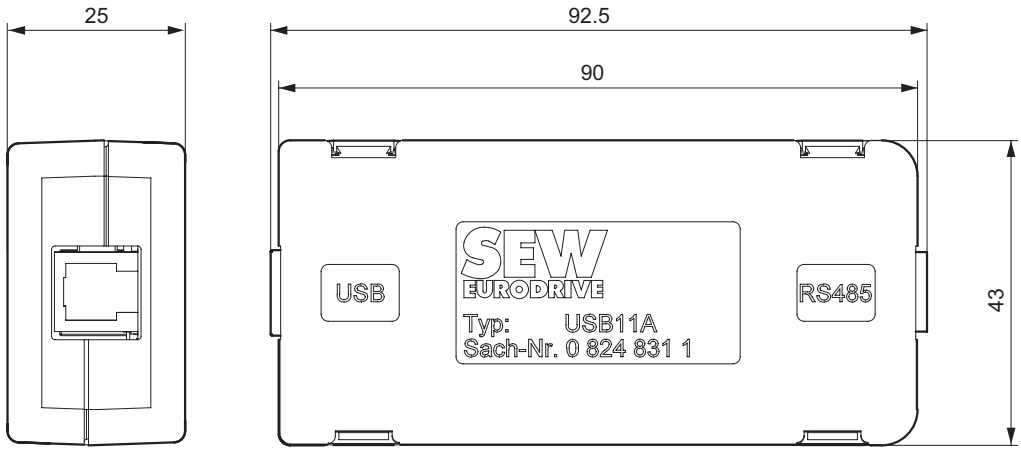	

4.14 Braking resistors, BW Series

4.14.1 General

BW series braking resistors are designed for the MOVITRAC® B series of inverters. The type of cooling is KS = self-cooling (air ventilation).

The surfaces of the resistors get very hot if loaded with P_N. Make sure that you select an installation site that will accommodate these high temperatures. As a rule, therefore, braking resistors are mounted on the control cabinet roof.

Plan for a load derating of 4 % per 10 K from an ambient temperature of 45 °C (113 °F). Do not exceed the maximum ambient temperature of 80 °C (176 °F). Note the maximum permissible temperature of other components (e.g. MOVITRAC® B) when installing in the control cabinet.

4.14.2 PTC braking resistors

Observe the following points for the PTC braking resistors:

- 4-quadrant operation is recommended for applications in which the level of regenerative energy is low.
- The resistor protects itself (reversible) against regenerative overload by changing abruptly to high resistance and no longer consuming any more energy.
- The inverter then switches off and issues an "overvoltage" error (error code 07).

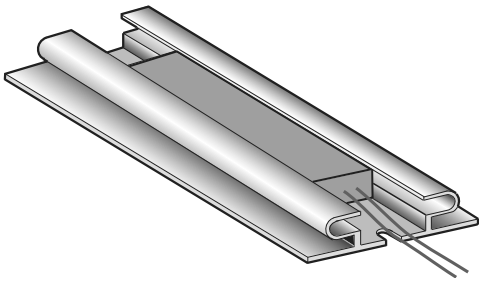

Assignment of the PTC braking resistors:

Braking resistor type	BW2	BW4
Part number	823 136 2[1)]	823 599 6[1)]
Resistance value R_{BR}	175 Ω ±10 %	87.5 Ω ±10 %
Ambient temperature ϑ_A	–25 °C (–13 °F) … +60 °C (140 °F)	–25 °C (–13 °F) … +60 °C (140 °F)
For MOVITRAC® B	0003 / 0004 (400/500 V)	0003 / 0004 (230 V)

1) Two screws M4 x 8, included in delivery

4.14.3 Flat design

The flat-design resistors have IP54 enclosure and are equipped with internal thermal overload protection (cannot be replaced). Depending on their type, you can install the resistors as follows:

- With support rail mounting FHS or submounting FKB under the heat sink. The braking resistors in the submounting do not achieve the specified CDF power. The FHS and FKB options are only suitable for the BW027-003 and BW072-003 braking resistors.
- Attach to a support rail using a BS touch guard.

Important: The load capacity applies for a horizontal mounting position [2]. Values are reduced by 10 % for a vertical mounting position [1].

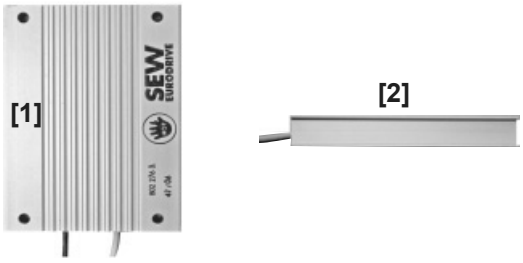

230 V

Braking resistor type	BW027-003	BW027-005
Part number	826 949 1	826 950 5
100 % CDF 50 % CDF 25 % CDF 12 % CDF 6 % CDF	230 W (0.308 HP) 310 W (0.416 HP) 410 W (0.550 HP) 550 W (0.738 HP) 980 W (1.31 HP)	450 W (0.603 HP) 610 W (0.818 HP) 840 W (1.13 HP) 1200 W (1.609 HP) 2360 W (3.165 HP)
Resistance value R_{BR}	27 Ω ±10 %	27 Ω ±10 %
Trip current	1.0 A	1.4 A
Ambient temperature ϑ_A	–20 °C (–4°F) … +45 °C (113 °F)	
For MOVITRAC® B 230 V	0003 ... 0022	0003 ... 0022

400 / 500 V

Braking resistor type	BW072-003	BW072-005
Part number	826 058 3	826 060 5
100 % CDF 50 % CDF 25 % CDF 12 % CDF 6 % CDF	230 W (0.308 HP) 310 W (0.416 HP) 420 W (0.563 HP) 580 W (0.778 HP) 1000 W (1.341 HP)	450 W (0.603 HP) 600 W (0.805 HP) 830 W (1.11 HP) 1110 W (1.489 HP) 2000 W (2.682 HP)
Resistance value R_{BR}	72 Ω ±10 %	72 Ω ±10 %
Trip current	0.6 A	1.0 A
Ambient temperature ϑ_A	–20 °C (–4°F) … +45 °C (113 °F)	
For MOVITRAC® B 400 / 500 V	0003 ... 0040	0003 ... 0040

4.14.4 Wire resistors and grid resistors

- Perforated sheet cover (IP20) open to mounting surface
- The short-term load capacity of the wire and grid resistors is higher than in the flat-type braking resistors (→ MOVIDRIVE® system manual, section "Selecting the braking resistor")
- A temperature switch is integrated in the BW...-T braking resistor
- A thermal overcurrent relay is integrated in the BW...-P braking resistor

SEW-EURODRIVE recommends also protecting the wire and grid resistors against overload using a bimetallic relay with trip characteristics of trip class 10 or 10A (in accordance with EN 60947-4-1). Set the trip current to the value I_F (→ following tables). Do not use electronic or electromagnetic fuses because these can be triggered even in case of short-term excess currents that are still within the tolerance range.

For braking resistors in the BW..-T / BW...-P series, you can connect the integrated temperature sensor / overcurrent relay using a 2-core, shielded cable as an alternative to a bimetallic relay. The cable entry for the BW...-T and BW...-P braking resistors can be run from the front or the back (→ dimension drawing for BW... / BW...-T / BW...-P braking resistors). Use filler plugs for tapped holes that are not connected.

The surfaces of the resistors get very hot if loaded with P_{Rated}. Make sure that you select an installation site that will accommodate these high temperatures. As a rule, therefore, braking resistors are mounted on the control cabinet roof.

The performance data listed in the tables below show the load capacity of the braking resistors according to their cyclic duration factor (cyclic duration factor = cdf of the braking resistor in % in relation to a cycle duration ≤ 120 s).

230 V

Type	BW027-006	BW027-012	BW018-015	BW018-035	BW018-075	BW012-025	BW012-050	BW012-100
Part number	822 422 6	822 423 4	–	–	–	821 680 0	–	–
Type BW..-T part number	–	–	1820 416 3	1820 138 5	1820 139 3	–	1820 140 7	1820 083 4
Type BW..-P part number	–	–	–	–	–	1820 414 7	–	–
100 % CDF kW (HP) 50 % CDF kW (HP) 25 % CDF kW (HP) 12 % CDF kW (HP) 6 % CDF kW (HP)	0.6 (0.8) 1.2 (1.6) 2.0 (2.7) 3.5 (4.7) 6.0 (8.0)	1.2 (1.6) 2.3 (3.1) 5.0 (6.7) 7.5 (10) 8.5[1] (11)	1.5 (2.0) 2.5 (3.4) 4.5 (6.0) 6.7 (9.0) 11.4 (15.3)	3.5 (4.7) 5.9 (7.9) 10.5 (14.1) 15.7 (21.1) 25.6[1] (34.3)	7.5 (10) 12.7 (17.0) 22.5 (30.1) 25.6[1] (34.3) 25.6[1] (34.3)	2.5 (3.4) 4.2 (5.6) 7.5 (10) 11.2 (15.0) 19.0 (25)	5.0 (6.7) 8.5 (11) 15.0 (20) 19.2[1] (25.7) 19.2[1] (25.7)	10 (13) 17 (23) 19.2[1] (25.7) 19.2[1] (25.7) 19.2[1] (25.7)
Resistance	27 Ω ±10 %		18 Ω ±10 %			12 Ω ±10 %		
Trip current I_F	4.7 A_{RMS}	6.7 A_{RMS}	4.0 A_{RMS}	8.1 A_{RMS}	14 A_{RMS}	10 A_{RMS}	19 A_{RMS}	27 A_{RMS}
Connections	Ceramic terminals 2.5 mm^2 (AWG12)			M8 stud				
Tightening torque	0.5 Nm (4.4 in·lb)		6 Nm (53 in·lb)					
Design	Wire resistor		Steel-grid resistor					
For MOVITRAC® B	0015 ... 0022		2 x parallel with 0110			0055 / 0075		

1) Physical power limit due to DC link voltage and resistance value.

Type	BW039-003	BW039-006	BW039-012	BW039-026	BW915	BW106	BW206
Part number	821 687 8	821 688 6	821 689 4	–	–	–	–
Type BW..-T part number	–	–	1820 136 9	1820 415 5	1820 413 9	1820 083 4	1820 412 0
100 % CDF kW (HP) 50 % CDF kW (HP) 25 % CDF kW (HP) 12 % CDF kW (HP) 6 % CDF kW (HP)	0.3 (0.4) 0.5 (0.7) 1.0 (1.3) 1.7 (2.3) 2.8 (3.8)	0.6 (0.8) 1.1 (1.5) 1.9 (2.5) 3.5 (4.7) 5.7 (7.6)	1.2 (1.6) 2.1 (2.8) 3.8 (5.1) 5.9[1] (7.9) 5.9[1] (7.9)	2.6 (3.5) 4.6 (6.2) 5.9[1] (7.9) 5.9[1] (7.9) 5.9[1] (7.9)	16.0 (21) 27.0 (36.2) 30.7[1] (41.2) 30.7[1] (41.2) 30.7[1] (41.2)	13 (17) 24 (32) 38.4[1] (51.5) 38.4[1] (51.5) 38.4[1] (51.5)	18 (24) 32 (43) 38.4[1] (51.5) 38.4[1] (51.5) 38.4[1] (51.5)
Resistance	39 Ω ±10 %				15 Ω ±10 %	6 Ω ±10 %	
Trip current I_F	2.8 A_{RMS}	3.9 A_{RMS}	5.5 A_{RMS}	8.1 A_{RMS}	28 A_{RMS}	38 A_{RMS}	42 A_{RMS}
Connections	Ceramic terminals 2.5 mm^2 (AWG12)				M8 stud		
Tightening torque	0.5 Nm (4.4 in·lb)				6 Nm (53 in·lb)		
Design	Wire resistor				Steel-grid resistor		
For MOVITRAC® B	0015 ... 0022				2 x parallel with 0110	0150 / 2 x parallel with 0220/0300	

1) Physical power limit due to DC link voltage and resistance value.

400 V

Type	BW100-006	BW168	BW268	BW147	BW247	BW347
Part number	821 701 7	820 604 X	820 715 1	820 713 5	820 714 3	820 798 4
Type BW..-T part number	1820 419 8	1820 133 4	1820 417 1	1820 134 2	1820 084 2	1820 135 0
100 % CDF kW (HP) 50 % CDF kW (HP) 25 % CDF kW (HP) 12 % CDF kW (HP) 6 % CDF kW (HP)	0.6 (0.8) 1.1 (1.5) 1.9 (2.5) 3.6 (4.8) 5.7 (7.6)	0.8 (1.1) 1.4 (1.9) 2.6 (3.5) 4.8 (6.4) 7.6 (10)	1.2 (1.6) 2.2 (3.0) 3.8 (5.1) 6.7 (9.0) 10[1] (13)	1.2 (1.6) 2.2 (3.0) 3.8 (5.1) 7.2 (9.7) 11 (15)	2.0 (2.7) 3.8 (5.1) 6.4 (8.6) 12 (16) 19 (25)	4.0 (5.3) 7.6 (10) 12.8(17.2) 20[1] (27) 20[1] (27)
Resistance	100 Ω ±10 %	68 Ω ±10 %		47 Ω ±10 %		
Trip current I_F	2.4 A_{RMS}	3.4 A_{RMS}	4.2 A_{RMS}	5 A_{RMS}	6.5 A_{RMS}	9.2 A_{RMS}
Connections	Ceramic terminals 2.5 mm^2 (AWG12)					Ceramic terminals 10 mm^2 (AWG8)
Tightening torque	0.5 Nm (4.4 in·lb)					1.6 Nm (14.2 in·lb)
Design	Wire resistor					
For MOVITRAC® B	0015 ... 0040			0055 / 0075		

1) Physical power limit due to DC link voltage and resistance value.

Type	BW039-012	BW039-026	BW039-050	BW018-015	BW018-035	BW018-075
Part number	821 689 4	–	–	821 684 3	–	–
Type BW..-T part number	1820 1369	1820 415 5	1820 137 7	–	1820 138 5	1820 139 3
Type BW..-P part number	–	–	–	1820 416 3	–	–
100 % CDF kW (HP) 50 % CDF kW (HP) 25 % CDF kW (HP) 12 % CDF kW (HP) 6 % CDF kW (HP)	1.2 (1.6) 2.1 (2.8) 3.8 (5.1) 7.0 (9.4) 11.4 (15.3)	2.6 (3.5) 4.6 (6.2) 8.3 (11) 15.3 (20.5) 24.0[1] (32)	5.0 (6.7) 8.5 (11) 15.0 (20) 24.0[1] (32) 24.0[1] (32)	1.5 (2.0) 2.5 (3.4) 4.5 (6.0) 6.7 (9.0) 11.4 (15.3)	3.5 (4.7) 5.9 (7.9) 10.5 (14.1) 15.7 (21.1) 26.6 (35.7)	7.5 (10) 12.7 (17.0) 22.5 (30.1) 33.7 (45.2) 52.2[1] (70.0)
Resistance	39 Ω ±10 %			18 Ω ±10 %		
Trip current I_F	5.5 A_{RMS}	8.1 A_{RMS}	11.3 A_{RMS}	9.1 A_{RMS}	13.9 A_{RMS}	20.4 A_{RMS}
Connections	Ceramic terminals 2.5 mm^2 (AWG12)		M8 stud	Ceramic terminals 2.5 mm^2 (AWG12)	M8 stud	
Tightening torque	0.5 Nm (4.4 in·lb)		6 Nm (53.1 in·lb)	1.0 Nm (8.9 in·lb)	6 Nm (53.1 in·lb)	
Design	Wire resistor		Steel-grid resistor			
For MOVITRAC® B	0110		0110	0150 / 0220		

1) Physical power limit due to DC link voltage and resistance value.

Type	BW915	BW012-025	BW012-050	BW012-100	BW0106	BW206
Part number	–	821 680 0	–	–	–	–
Type BW..-T part number	1820 413 9	–	1820 140 7	1820 141 5	1820 083 4	1820 412 0
Type BW..-P part number	–	1820 414 7	–	–	–	–
100 % CDF kW (HP) 50 % CDF kW (HP) 25 % CDF kW (HP) 12 % CDF kW (HP) 6 % CDF kW (HP)	16 (21) 27 (36) 45[1] (60) 45[1] (60) 45[1] (60)	2.5 (3.4) 4.2 (5.6) 7.5 (10) 11.2 (15.0) 19.0 (25)	5.0 (6.7) 8.5 (11) 15.0 (20) 22.5 (30.1) 38.0 (51.0)	10 (13) 17 (23) 30 (40) 45 (60) 56[1] (75)	13.5 (18.1) 23 (31) 40 (54) 61 (82) 102 (137)	18 (24) 30.6 (41.0) 54 (72) 81 (110) 136.8 (183.5)
Resistance	15 Ω ±10 %	12 Ω ±10 %			6 Ω ±10 %	
Trip current I_F	32.6 A_{RMS}	14.4 A_{RMS}	20.4 A_{RMS}	28.8 A_{RMS}	47.4 A_{RMS}	54.7 A_{RMS}
Connections	M8 stud	Ceramic terminals 2.5 mm^2 (AWG12)			M8 stud	
Tightening torque	6 Nm (53.1 in·lb)	0.5 Nm (4.4 in·lb)			6 Nm (53.1 in·lb)	
Design	Steel-grid resistor					
For MOVITRAC® B	0220	0300			0370 ... 0750	

1) Physical power limit due to DC link voltage and resistance value.

4.14.5 Dimensions of BW braking resistors

Flat-design

Flat-design resistors: The connecting lead is 500 mm (19.69 in) long. The scope of delivery includes four M4 threaded bushes each of type 1 and 2.

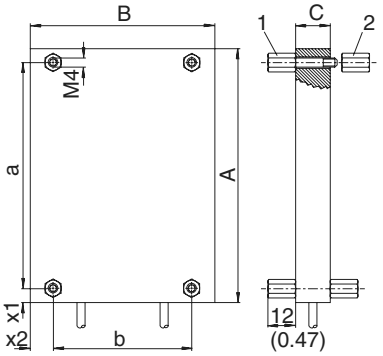

Type	Main dimensions [mm (in)]			Fastening parts [mm (in)]				Weight [kg (lb)]
	A	B	C	a	b/c/e	x1	x2	
BW072-003 BW027-003	110 (4.3)	80 (3.2)	15 (0.6)	98 (3.9)	60 (2.4)	6 (0.2)	10 (0.4)	0.3 (0.7)
BW072-005 BW027-005	216 (8.5)	80 (3.2)	15 (0.6)	204 (8.0)	60 (2.4)	6 (0.2)	10 (0.4)	0.6 (1.3)

Wire resistors

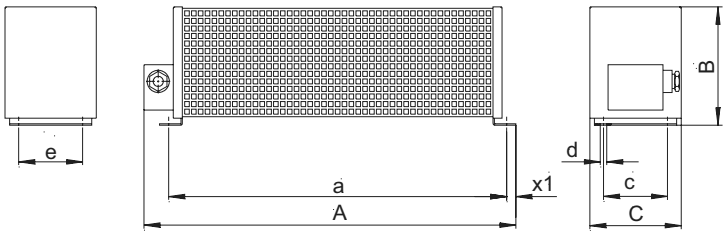

Type	Main dimensions [mm (in)]				Fastening parts [mm (in)]				Weight [kg (lb)]
	A	A BW..-T	B	C	a	b/c/e	x1	d	
BW027-006	486 (19.1)	–	120 (4.7)	92 (3.6)	426 (16.8)	64 (2.5)	10 (0.4)	5.8 (0.2)	2.2 (4.9)
BW027-012	486 (19.1)	–	120 (4.7)	185 (7.3)	426 (16.8)	150 (5.9)	10 (0.4)	5.8 (0.2)	4.3 (9.5)
BW100-006 (-T)	486 (19.1)	486 (19.1)	120 (4.7)	92 (3.6)	426 (16.8)	64 (2.5)	10 (0.4)	5.8 (0.2)	2.2 (4.9)
BW168 (-T)	365 (14.4)	406 (16.0)	120 (4.7)	185 (7.3)	326 (12.8)	150 (5.9)	10 (0.4)	5.8 (0.2)	3.6 (8.0)
BW268 (-T)	465 (18.3)	486 (19.1)	120 (4.7)	185 (7.3)	426 (16.8)	150 (5.9)	10 (0.4)	5.8 (0.2)	4.3 (9.5)
BW147 (-T)	465 (18.3)	486 (19.1)	120 (4.7)	185 (7.3)	426 (16.8)	150 (5.9)	10 (0.4)	5.8 (0.2)	4.3 (9.5)
BW247 (-T)	665 (16.2)	686 (27.0)	120 (4.7)	185 (7.3)	626 (24.7)	150 (5.9)	10 (0.4)	5.8 (0.2)	6.1 (13.5)
BW347 (-T)	670 (26.4)	750 (29.5)	145 (5.7)	340 (13.4)	630 (24.8)	300 (11.8)	10 (0.4)	5.8 (0.2)	13.2 (29.1)
BW039-003	286 (11.3)	–	120 (4.7)	92 (3.6)	226 (8.9)	64 (2.5)	10 (0.4)	5.8 (0.2)	1.5 (3.3)
BW039-006	486 (23.1)	–	120 (4.7)	92 (3.6)	426 (16.8)	150 (5.9)	10 (0.4)	5.8 (0.2)	2.2 (4.9)
BW039-012 (-T)	486 (19.1)	486 (19.1)	120 (4.7)	185 (7.3)	426 (16.8)	150 (5.9)	10 (0.4)	5.8 (0.2)	4.3 (9.5)
BW039-026-T	–	586 (23.1)	120 (4.7)	275 (10.8)	530 (20.9)	240 (9.5)	10 (0.4)	5.8 (0.2)	7.5 (16.6)

Grid resistors

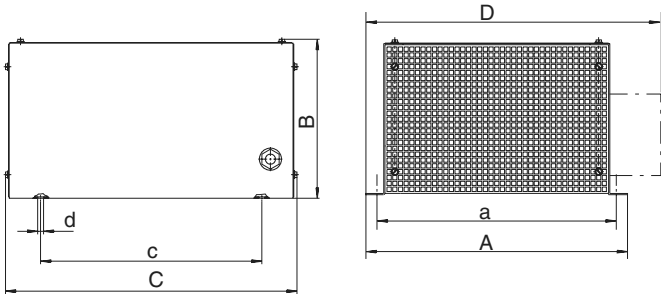

Type	Main dimensions [mm (in)]				Fastening parts [mm (in)]				Mass [kg (lb)]
	A	A BW..-T	B	C	a	b/c/e	x1	d	
BW012-025	295 (11.6)	–	260 (10.2)	490 (19.3)	270 (10.6)	380 (15.0)	–	10.5 (0.4)	8.0 (17.6)
BW012-025-P[1)]	295 (11.6)	–	260 (10.2)	490 (19.3)	270 (10.6)	380 (15.0)	–	10.5 (0.4)	8.0 (17.6)
BW012-050-T	–	395 (15.5)	260 (10.2)	490 (19.3)	370 (14.6)	380 (15.0)	–	10.5 (0.4)	12 (26.5)
BW012-100-T	–	595 (23.4)	260 (10.2)	490 (19.3)	570 (22.4)	380 (15.0)	–	10.5 (0.4)	21 (46.3)
BW018-015	600 (23.6)	–	120 (4.7)	92 (3.6)	540 (21.3)	64 (2.5)	10 (0.4)	5.8 (0.2)	4.0 (8.8)
BW018-015-P	620 (24.4)	–	120 (4.7)	92 (3.6)	540 (21.3)	64 (2.5)	10 (0.4)	5.8 (0.2)	4.0 (8.8)
BW018-035-T	–	295 (11.6)	260 (10.2)	490 (19.3)	270 (10.6)	380 (15.0)	–	10.5 (0.4)	9.0 (19.8)
BW018-075-T	–	595 (23.4)	260 (10.2)	490 (19.3)	570 (22.4)	380 (15.0)	–	10.5 (0.4)	21 (46.3)
BW039-050-T	–	395 (15.6)	260 (10.2)	490 (19.3)	370 (14.6)	380 (15.0)	10 (0.4)	10.5 (0.4)	12 (26.5)
BW915-T	–	795 (31.3)	260 (10.2)	490 (19.3)	770 (30.3)	380 (15.0)	–	10.5 (0.4)	26 (57.3)
BW106-T	–	795 (31.3)	260 (10.2)	490 (19.3)	770 (30.3)	380 (15.0)	–	10.5 (0.4)	32 (70.5)
BW206-T	–	995 (39.2)	260 (10.2)	490 (19.3)	970 (38.2)	380 (15.0)	–	10.5 (0.4)	43 (94.8)

1) D = 355 mm (14.0 in)

PTC braking resistors

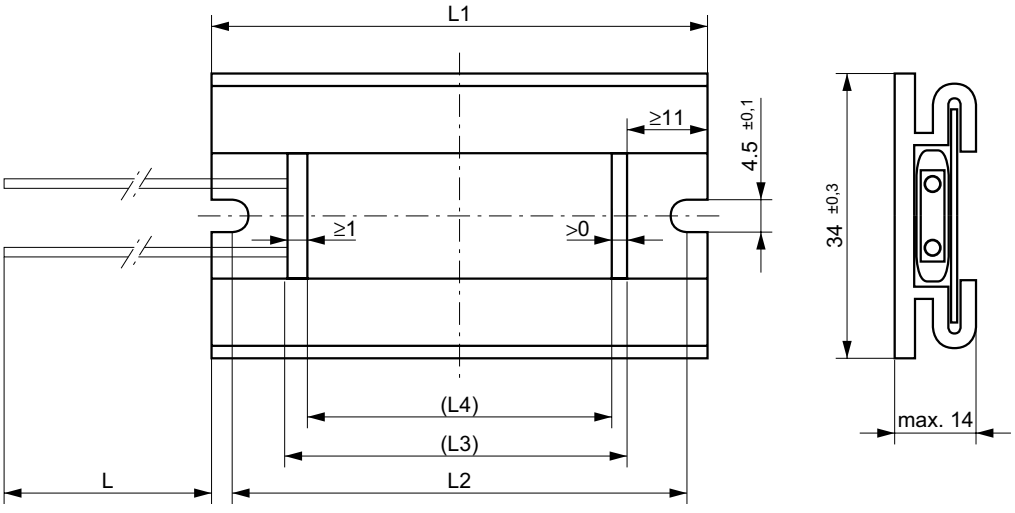

Type	L1	L2	L3	L4
BW2	124 (5.1)	117 (4.6)	97 (3.8)	95 (3.7)
BW4	124 (5.1)	117 (4.6)	97 (3.8)	95 (3.7)

4.15 Touch guard BS

Touch guard dimension drawing:

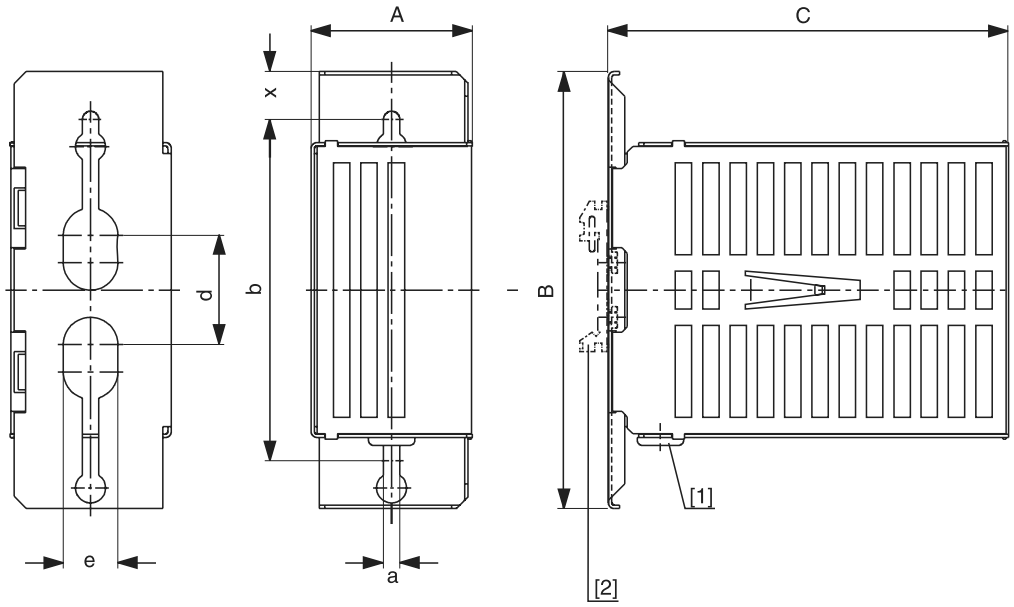

[1] Grommet
[2] Support rail mounting

Type	Main dimensions [mm (in)]			Mounting dimensions [mm (in)]				
	A	B	C	b	d	e	a	x
BS-003	60 (2.4)	160 (6.3)	146 (5.8)	125 (4.9)	40 (1.6)	20 (0.8)	6 (0.2)	17.5 (0.7)
BS-005	60 (2.4)	160 (6.3)	252 (9.9)	125 (4.9)	40 (1.6)	20 (0.8)	6 (0.2)	17.5 (0.7)

Type	Weight [kg (lb)]	Part number	DIN-rail installation	BW
BS-003	0.35 (0.8)	813 151 3	Accessory S001 / part number 822 194 4	BW027-003 / BW072-003
BS-005	0.5 (1.1)	813 152 X		BW027-005 / BW072-005

4.16 Submounting of FKB flat-design resistors

FKB..B is used for submounting of flat-design resistors under the inverter.

Type	Part number	Size	Braking resistor	
			230 V	400/500 V
FKB11B	1820 728 6	0XS	BW4	BW2
FKB12B	1820 729 4	0S	BW027-003	BW072-003
FKB13B	1820 730 8	0L		

The braking resistors in the submounting do not achieve the specified CDF power.

Dimension drawing:

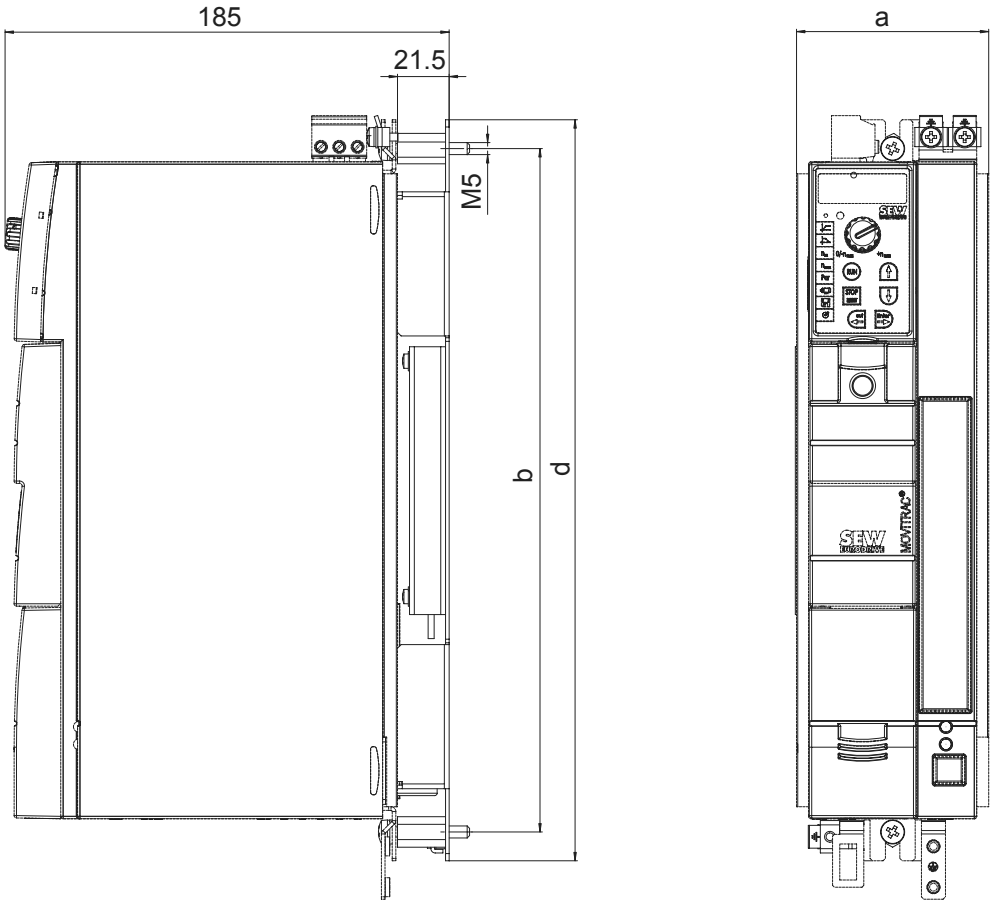

MOVITRAC® B size	a	b	d
0XS	55	196	220
0S	80	196	220
0L	80	284.5	308.5

4.17 FHS support rail mounting

The FHS is used for support rail mounting of MOVITRAC® B frequency inverters and for the submounting of flat-design resistors.

Type	Part number	Size	Braking resistor	
			230 V	400/500 V
FHS11B	1820 724 3	0XS	BW4	BW2
FHS12B	1820 725 1	0S	BW027-003	BW072-003
FHS13B	1820 727 8	0L		

Dimension drawing:

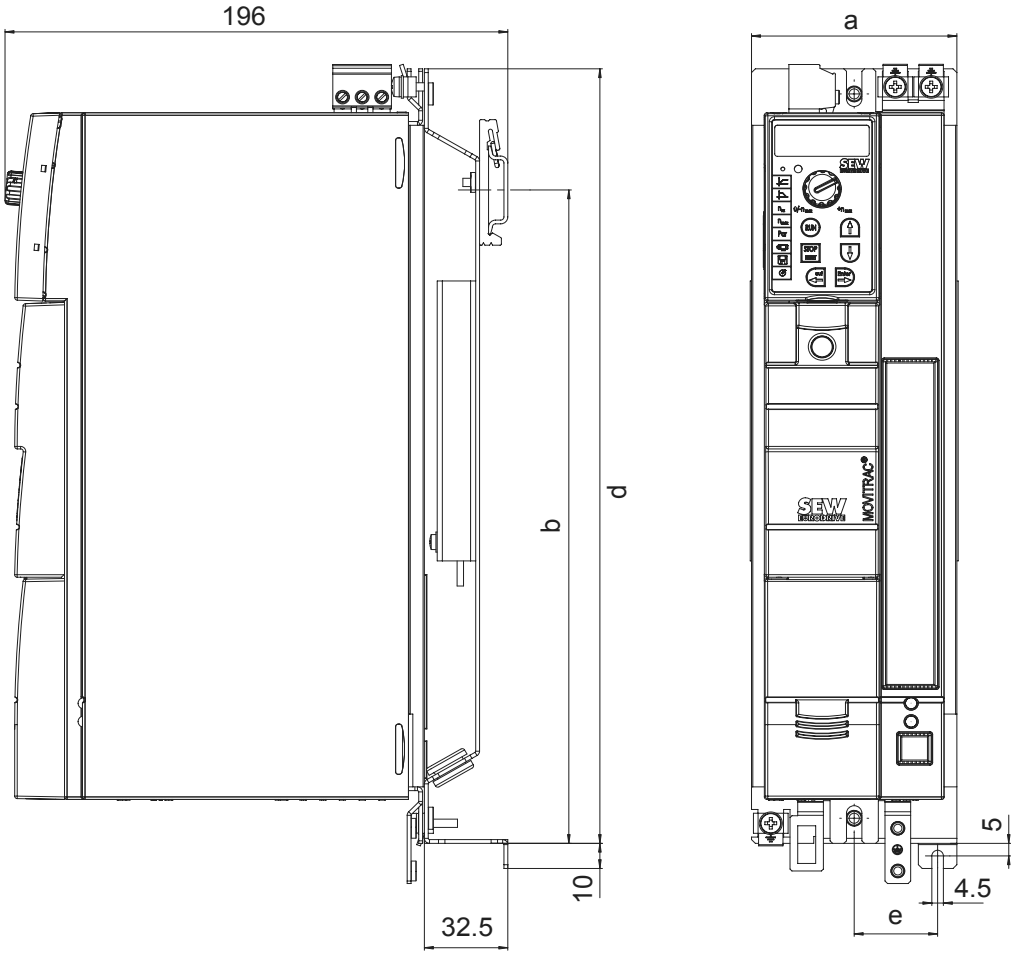

MOVITRAC® B size	a	b	d	e
0XS	55	171.5	220	7.5
0S	80	171.5	220	32.5
0L	80	260.3	308.5	32.5

4.18 ND line chokes

The line choke assists in overvoltage protection. The line choke limits the charging current when several inverters are connected together in parallel on the input end with shared mains contactors. ND line filters have cRUus approval independent of the MOVITRAC® B. The ambient temperature range is –25 °C (–13 °F) ... +45 °C (113 °F). The enclosure is IP00 (EN 60529).

Line choke type	ND 010-301	ND 020-151	ND 027-123[1)]	ND 035-073[1)]
Part number	826 972 6	826 973 4	825 771 X	825 772 8
Rated voltage V_{Rated}	1 x AC 230 V ±10 %		3 x AC 380 ... 500 V ±10 %	
Rated current I_{Rated}	AC 10 A	AC 20 A	AC 27 A	AC 35 A
Power loss at I_{Rated} P_V	6 W (0.008 HP)	10 W (0.013 HP)	35 W (0.047 HP)	35 W (0.047 HP)
Inductance L_{Rated}	3 mH	1.5 mH	1.2 mH	0.7 mH
Terminal strip	4 mm² (AWG10)	10 mm² (AWG8)		
Tightening torque	0.6 Nm (5.3 in·lb)	1.5 Nm (13.3 in·lb)	4.0 ... 4.5 Nm (35.4 ... 39.8 in·lb)	
Suitable for MOVITRAC® B				
Single-phase 230 V	0003 ... 0008	0011 ... 0022	0003 ... 0022	

1) For connecting several single-phase inverters to one three-phase line choke.

Line choke type		ND 020-013	ND045-013	ND085-013	ND150-013
Part number		826 012 5	826 013 3	826 014 1	825 548 2
Rated voltage V_{Rated}		3 x AC 380 ... 500 V ±10 %			
Rated current I_{Rated}		AC 20 A	AC 45 A	AC 85 A	AC 150 A
Power loss at I_{Rated} P_V		10 W (0.013 HP)	15 W (0.020 HP)	25 W (0.034 HP)	65 W (0.087 HP)
Inductance L_{Rated}		0.1 mH	0.1 mH		
Terminal strip		4 mm² (AWG10)	10 mm² (AWG8)	35 mm² (AWG2)	Bolt M10/PE: M8
Tightening torque		0.6 ... 0.8 Nm (5.3 ... 7.1 in·lb)	2.5 Nm (22.1 in·lb)	3.2 ... 3.7 Nm (28.3 ... 32.7 in·lb)	6 Nm (53.1 in·lb)
Suitable for MOVITRAC® B					
3-phase 400/500 V	100 % I_{Rated}	0003 ... 0075	0110 ... 0220	0300 ... 0450	0550 ... 0750
	125 % I_{Rated}	0003 ... 0075	0110 ... 0150	0220 ... 0370	0450 ... 0750
Single-phase 230 V	100 % I_{Rated}	0003 ... 0055	0075 ... 0110	0150 ... 0220	0300
	125 % I_{Rated}	0003 ... 0037	0055 ... 0750	0110 ... 0150	0220 ... 0300

4.18.1 Dimensions ND 010-301 / ND 020-151

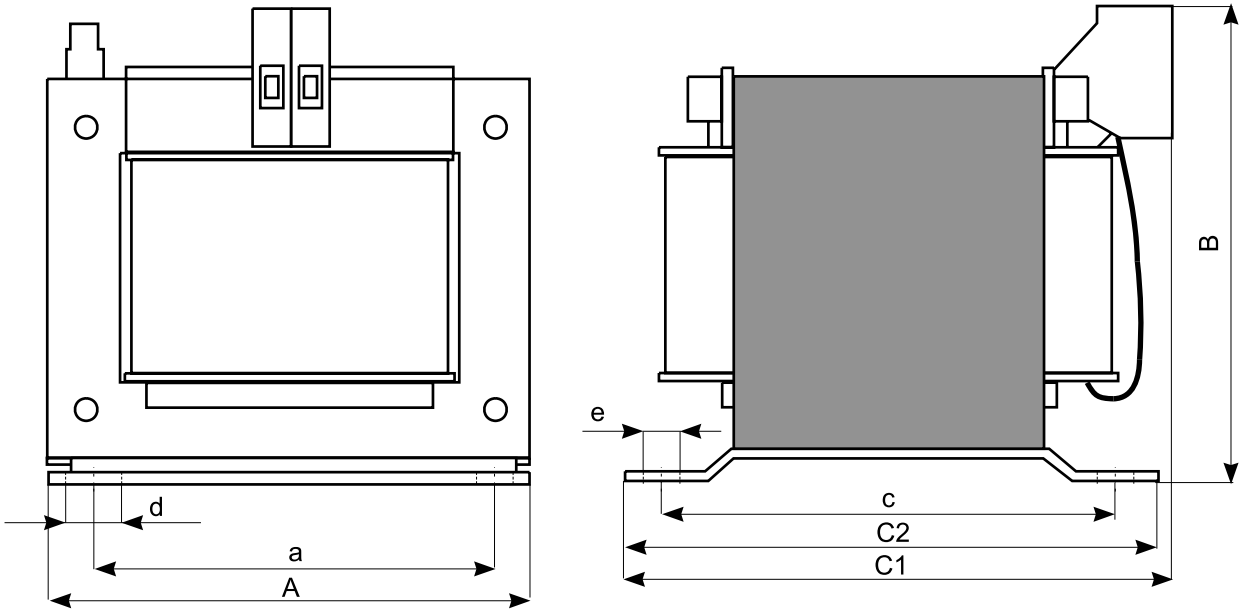

Type	Main dimensions [mm (in)]				Mounting dimensions [mm (in)]				Weight [kg (lb)]
	A	B	C1	C2	a	c	d	e	
ND 010-301	90 (3.5)	100 (3.9)	80 (3.2)	70 (2.8)	64 (2.5)	52 (2.1)	4.4 (0.2)	7.4 (0.3)	1.4 (3.1)
ND 020-151	90 (3.5)	100 (3.9)	90 (3.6)	70 (2.8)	64 (2.5)	52 (2.1)	4.4 (0.2)	7.4 (0.3)	1.4 (3.1)

4.18.2 Dimensions of ND 020-013 / ND 027-123 / ND 035-073 / ND 045-013 / ND 085-013 / ND 150-013

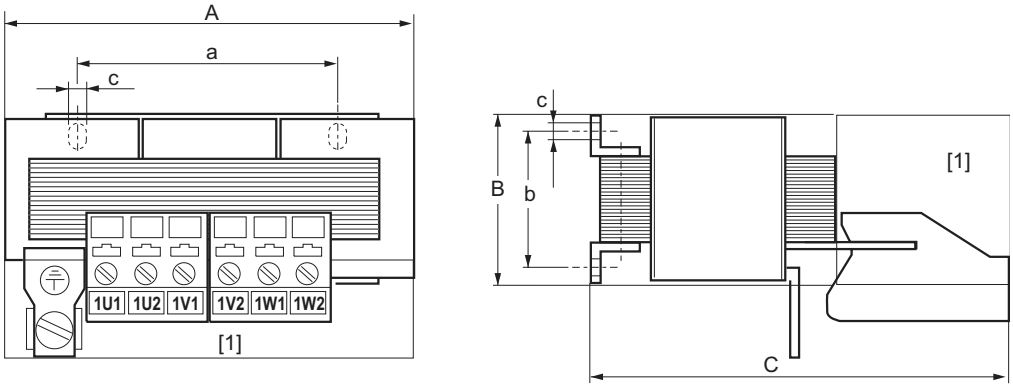

[1] = Space for touch-safe terminal strips

Type	Main dimensions [mm (in)]			Mounting dimensions [mm (in)]			Weight [kg (lb)]
	A	B	C	a	b	d/e	
ND 020-013	85 (3.4)	60 (2.4)	120 (4.7)	50 (2.0)	31 (1.2)	5 – 10 (0.2 – 0.4)	0.5 (1.1)
ND 027-123	185 (7.3)	140 (5.5)	200 (7.9)	136 (5.4)	87 (3.4)	5 – 10 (0.2 – 0.4)	6.0 (13.2)
ND 035-073	185 (7.3)	140 (5.5)	225 (8.9)	136 (5.4)	87 (3.4)	5 – 10 (0.2 – 0.4)	11 (24.2)
ND 045-013	125 (4.9)	95 (3.7)	170 (6.7)	84 (3.3)	55 ... 75 (2.2 ... 3.0)	6 (0.2)	2.5 (5.5)
ND 085-013	185 (7.3)	115 (4.5)	235 (9.3)	136 (5.4)	56 (2.2)	7 (0.3)	8 (17.6)
ND 150-013	257 (10.1)	145 (5.7)	230 (9.1)	170 (6.7)	77 (3.0)	8 (0.3)	17 (37.5)

4.19 NF line filter

The line filter suppresses interference emissions on the line side of inverters. The ambient temperature range is –25 °C (–13 °F) ... +45 °C (+113 °F). The enclosure is IP20 (EN 60529). Nf mains filters have cRUus approval independent of the MOVITRAC® B.

Type	NF009-503	NF014-503	NF018-503	NF035-503	NF048-503
Part number	827 412 6	827 116 X	827 413 4	827 128 3	827 117 8
Rated current	AC 9 A	AC 14 A	AC 18 A_{AC}	AC 35 A	AC 48 A
Power loss	6 W (0.008 HP)	9 W (0.01 HP)	12 W (0.016 HP)	15 W (0.020 HP)	22 W (0.030 HP)
Earth-leakage current	≤ 25 mA	≤ 25 mA	≤ 25 mA	≤ 25 mA	≤ 40 mA
Connections PE screw	4 mm^2 (AWG10) M6			10 mm^2 (AWG8) M6	10 mm^2 (AWG8) M6
Tightening torque	0.6 ... 0.8 Nm (5.3 ... 7.1 in·lb)			1.8 Nm (15.9 in·lb)	1.8 Nm (15.9 in·lb)
Suitable for MOVITRAC® B					
100 % I_{Rated} 380 ... 500 V	0003 ... 0040	0055 ... 0075	–	0110 ... 0150	0220
125 % I_{Rated} 380 ... 500 V	0003 ... 0030	0040 ... 0055	0075	0110	0150

Type	NF063-503	NF085-503	NF115-503	NF150-503
Part number	827 414 2	827 415 0	827 416 9	827 417 7
Rated current	AC 63 A	AC 85 A	AC 115 A	AC 150 A
Power loss	30 W (0.040 HP)	35 W (0.047 HP)	60 W (0.080 HP)	90 W (0.12 HP)
Earth-leakage current	≤ 30 mA	≤ 30 mA	≤ 30 mA	≤ 30 mA
Connections PE screw	16 mm^2 (AWG6) M6	35 mm^2 (AWG2) M8	50 mm^2 (AWG1/0) M10	95 mm^2 (AWG4/0) M10
Tightening torque	3 Nm (26.6 in·lb)	3.7 Nm (32.7 in·lb)		
Suitable for MOVITRAC® B				
100 % I_{Rated} 380 ... 500 V	0300	0370/0450	0550	0750
125 % I_{Rated} 380 ... 500 V	0220	0300/0370	0450	0550/0750

Line filter dimension drawing [mm (in)]:

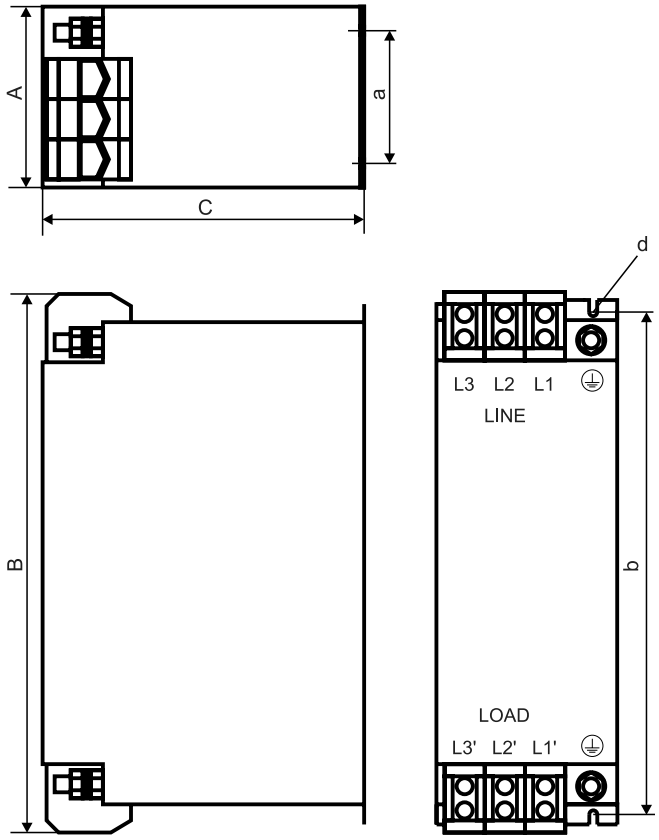

Line filter type	Main dimensions		
	A	B	C
NF009-503	55 (2.2)	195 (7.7)	80 (3.2)
NF014-503		225 (8.9)	
NF018-503	50 (2.0)	255 (10.0)	
NF035-503	60 (2.4)	275 (10.8)	100 (3.9)
NF048-503		315 (12.4)	
NF063-503	90 (3.5)	260 (10.2)	
NF085-503		320 (12.6)	140 (5.5)
NF115-503	100 (3.9)	330 (13.0)	155 (6.1)

Line filter type	Mounting dimensions		Hole dimension	PE connection	Weight kg (lb)
	a	b	d		
NF009-503	20 (0.8)	180 (7.1)	5.5 (0.2)	M5	0.8 (1.8)
NF014-503		210 (8.3)			0.9 (2.0)
NF018-503		240 (9.4)			1.1 (2.4)
NF035-503	30 (1.2)	255 (10.0)			1.7 (3.7)
NF048-503		295 (11.6)		M6	2.1 (4.6)
NF063-503	60 (2.4)	235 (9.3)	6.5 (0.3)		2.4 (5.3)
NF085-503		255 (10.0)		M8	3.5 (7.7)
NF115-503	65 (2.6)			M10	4.8 (10.6)

4.20 ULF11A foldable ferrites

Foldable ferrites can be used to reduce the noise emission of the mains cable. Only use foldable ferrites with single-phase units.

The delivery scope contains three foldable ferrites, which much be installed according to the installation instructions.

Technical data:

Part number	1821 213 1 (3 pcs)
For cable diameter	10.5 ... 12.5 mm (0.41 ... 0.49 in)
Storage temperature	– 40 °C (–40 °F) ... +85 °C (+185 °F)
Operating temperature	–25 °C (–13 °F) … +105 °C (+221 °F)

Foldable ferrites dimension drawing:

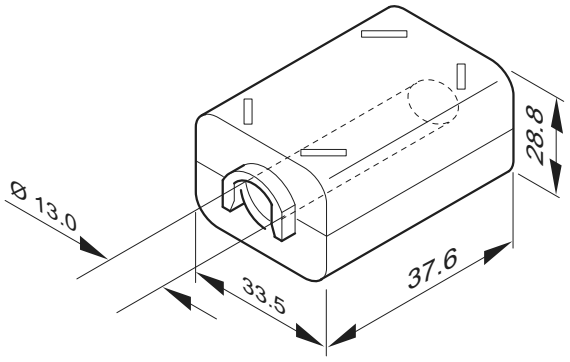

4.21 HD series output chokes

You can reduce the radiated interference of the unshielded motor cable by using an output choke.

Output choke type	HD001	HD002	HD003	HD012
Part number	813 325 5	813 557 6	813 558 4	1821 217 4
Max. power loss P_{Vmax}	15 W (0.020 HP)	8 W (0.01 HP)	30 W (0.040 HP)	11 W (0.015 HP)
Mass	0.5 kg 1.1 lb	0.2 kg 0.44 lb	1.1 kg 2.4 lb	0.55 kg 1.2 lb
For cable cross sections	1.5 ... 16 mm^2 AWG16 ... 6	≤ 1.5 mm^2 ≤ AWG16	≥ 16 mm^2 ≥ AWG6	≤ 4 mm^2 ≤ AWG12
Ambient temperature	depends on inverter			–10 ... +60 °C (14 °F ... 140 °F) / derating 3 % I_{Rated} at 40 °C ... 60 °C (104 °F ... 140 °F)

HD dimension drawing 001 / 002 / 003 [mm (in)]:

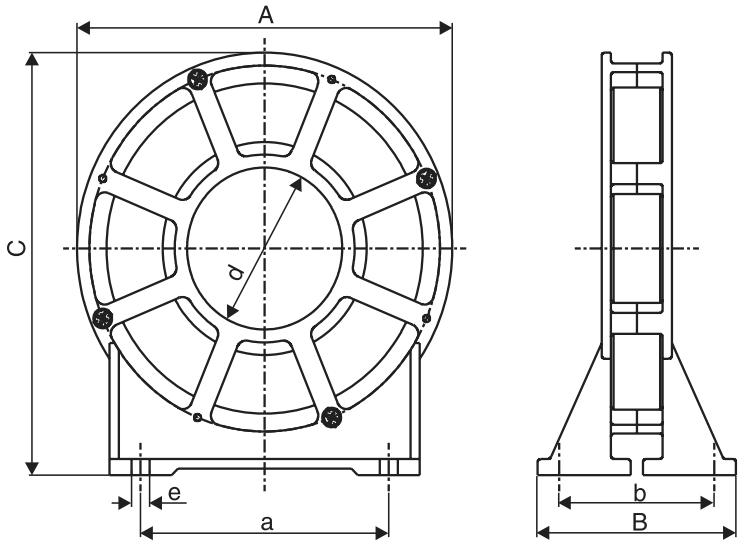

Output choke type	Main dimensions			Mounting dimensions		Inner diameter	Hole dimension
	A	B	C	a	b	d	e
HD001	121 (4.8)	64 (2.5)	131 (5.2)	80 (3.2)	50 (2.0)	50 (2.0)	5.8 (0.2)
HD002	66 (2.6)	49 (1.9)	73 (2.9)	44 (1.7)	38 (1.5)	23 (0.9)	5.8 (0.2)
HD003	170 (6.7)	64 (2.5)	185 (7.3)	120 (4.7)	50 (2.0)	88 (3.5)	7.0 (0.3)

HD012 dimension drawing

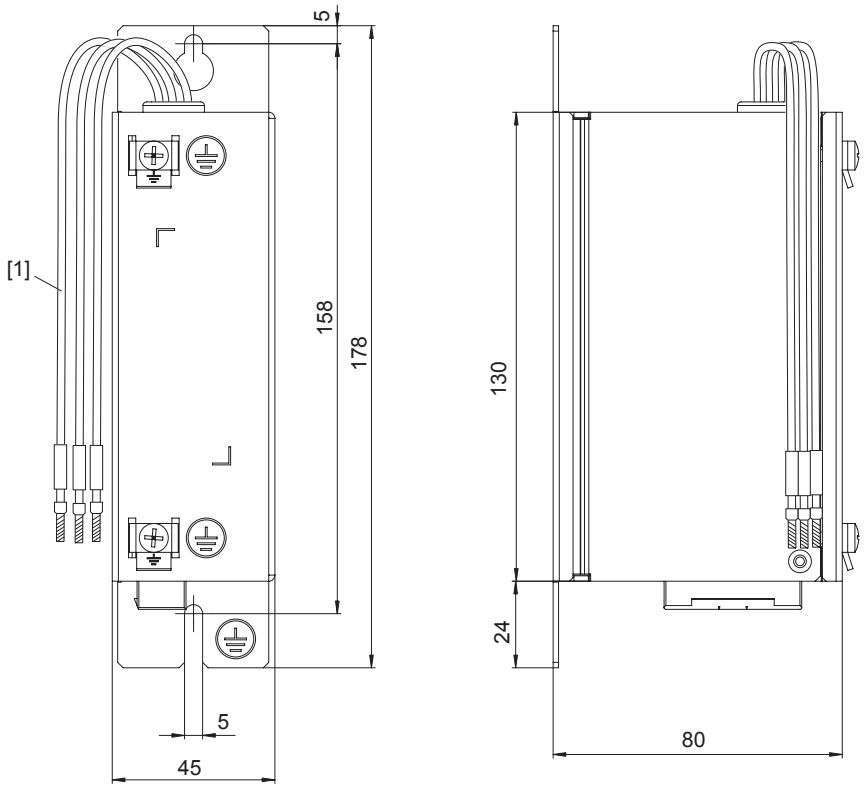

[1] Length = 100 mm (3.94 in)

4.22 FKE EMC-module

Using the EMC-module, they can reach limit class C1 (B) on the input side and output side. The EMC-module is designed 100 % operation and 125 % operation.

Type	FKE12B	FKE13B
Part number	829 590 5	829 591 3
Rated voltage	3 × AC 230 ... 500 V	
Voltage drop in the filter (at rated current)	< 1 %	
Rated current	AC 12 A	
Earth-leakage current (at rated current)	< 14 mA	
Power loss (at rated current)	20 W (0.027 HP)	
Ambient temperature	–10 °C (14 °F) ... +60 °C (140 °F) / derating 3 % I_{Rated} at 40 °C (104 °F) ... 60 °C (140 °F)	
Enclosure	IP20	
Mains and the motor connection	Terminal screws 4 mm^2 (AWG 10)	
Inverter connection	Cables with conductor end sleeves	
Mass	400 g (0.88 lb)	480 g (1.06 lb)
Can be sub-mounted for sizes	0S	0L
For MOVITRAC® B...-5A3	0005 / 0008 / 0011 / 0015	0022 / 0030 / 0040
For MOVITRAC® B...-2A3	0005 / 0008	0011 / 0015 / 0022

Dimensions

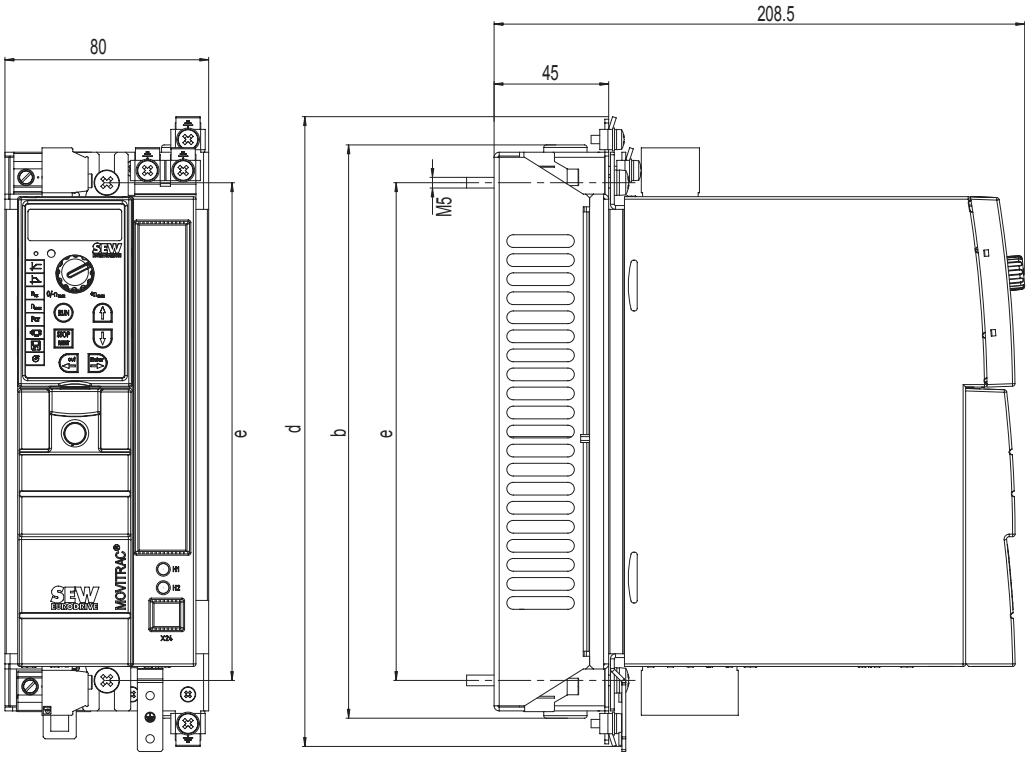

EMC module	MOVITRAC® B	b	d	e
FKE12B	Size 0S	226	248	196
FKE13B	Size 0L	314.5	336.5	284.5

4.23 HF output filter

SEW output filters of the HF type are sine filters. Sine filters smooth the output voltage of inverters. Use output filters in the following cases:

- In group drives (several motor leads in parallel); the discharge currents in the motor cables are suppressed.
- To protect the motor winding insulation of non-SEW motors, which are not suitable for inverters.
- For protection against overvoltage spikes in long motor cables (> 100 m [328 ft])

	NOTE
	Do not use output filters in hoists because of the voltage drop in the filter!

	NOTE
	During project planning of the drive, take into account the voltage drop in the output filter and consequently the reduced motor torque available. This applies particularly to AC 230 V units with output filters.

Output filters attenuate interference emission via unshielded motor lines.

The ambient temperature range is 0 ... +45 °C (32 ... 113 °F) (reduction: 3 % per K up to max. 60 °C [140 °F]).

Output filter type		**HF008-503**[1]	**HF015-503**[1]	**HF022-503**[1]	**HF030-503**[1]	**HF040-503**[1]	**HF055-503**[1]
Part number		826 029 X	826 030 3	826 031 1	826 032 X	826 311 6	826 312 4
Rated voltage	V_{Mains}	3 × AC 380 V –10 % ... 3 × AC 500 V +10 %, 50/60 Hz[2]					
Earth-leakage current at $V_{R(ated)}$	ΔI	0 mA					
Power loss with I_{Rated}	P_V	25 W (0.034 HP)	35 W (0.047 HP)	55 W (0.074 HP)	65 W (0.087 HP)	90 W (0.12 HP)	115 W (0.154 HP)
Interference emission via unshielded motor cable		In accordance with class B limit according to EN 55011 and EN 55014 complies with EN 50081, parts 1 and 2					
Enclosure (EN 60529)		IP20					
Connections / Tightening torque		M4 terminal stud 1.6 Nm ± 20 % (14.2 in·lb ± 20 %)					
Mass		3.1 kg (6.8 lb)	4.4 kg (9.7 lb)			10.8 kg (23.8 lb)	
Assignment of AC 400/500 V units							
Voltage drop at I_{Rated}	ΔV	< 6.5 % (7.5 %) at AC 400 V / < 4 % (5 %) at AC 500 V at f_{Amax} = 50 Hz (60 Hz)					
Rated throughput current[3] $I_{Rated\ 400\ V}$ (with V_{mains} = 3 × AC 400 V)		AC 2.5 A	AC 4 A	AC 6 A	AC 8 A	AC 10 A	AC 12 A
Rated throughput current[3] $I_{Rated\ 500\ V}$ (with V_{mains} = 3 × AC 500 V)		AC 2 A	AC 3 A	AC 5 A	AC 6 A	AC 8 A	AC 10 A
Rated operation (100 %)[3]		0003 ... 0008	0011/0015	0022	0030	0040	0055
Increased power (125 %)[3]		0003 ... 0005	0008/ 0011	0015	0022	0030	0040
Assignment to AC 230 V units							
Voltage drop at I_{Rated}	ΔV	–	< 18.5 % (19 %) at AC 230 V with f_{Amax} = 50 Hz (60 Hz)				
Rated throughput current[3] $I_{Rated\ 230\ V}$ (with V_{mains} = 3 × AC 230 V)		AC 4.3 A	AC 6.5 A	AC 10.8 A	AC 13 A	AC 17.3 A	AC 22 A
Rated operation (100 %)[3]		–	–	0015/0022	–	0037	0055
Increased power (125 %)[3]		–	–	0015/0022	–	–	0037

1) Approved in accordance with UL/cUL in conjunction with MOVITRAC® drive inverters. SEW-EURODRIVE will provide a certificate on request.

2) A reduction of 6 % I_{Rated} per 10 Hz applies above f_{AN} = 60 Hz for the rated through current I_{Rated}.

3) Only applies for operation without V_{DC} link connection. For operating the inverter with V_{DC} link connection, observe the project planning notes in the system manual of the respective inverter.

Output filter type		HF075-503[1]	HF023-403[1]	HF033-403[1]	HF047-403[1]	HF450-503
Part number		826 313 2	825 784 1	825 785 X	825 786 8	826 948 3
Rated voltage	V_R	3 × AC 380 V –10 % ... 3 × AC 500 V +10 %, 50/60 Hz[2]				
Earth-leakage current at V_R	ΔI	0 mA				
Power loss with I_{Rated}	P_V	135 W (0.181 HP)	90 W (0.12 HP)	120 W (0.161 HP)	200 W (0.268 HP)	400 W (0.536 HP)
Interference emission via unshielded motor cable		In accordance with class B limit according to EN 55011 and EN 55014 complies with EN 50081, parts 1 and 2				
Enclosure (EN 60529)		IP 20	IP20			IP 10
Connections / Tightening torque		M4 terminal stud 1.6 Nm ±20 % (14.2 in·lb ±20 %)	35 mm^2 (AWG 2) 3.2 Nm (38.3 in·lb)			
Mass		10.8 kg (23.8 lb)	15.9 kg (35.1 lb)	16.5 kg (36.4 lb)	23 kg (51 lb)	32 kg (71 lb)
Assignment to AC 400/500 V units						
Voltage drop at I_{Rated}	ΔV	< 6.5 % (7.5 %) at AC 400 V / < 4 % (5 %) at AC 500 V at f_{Amax} = 50 Hz (60 Hz)				
Rated throughput current[3] $I_{Rated\ 400\ V}$ (with V_{mains} = 3 × AC 400 V)		AC 16 A	AC 23 A	AC 33 A	AC 47 A	AC 90 A
Rated throughput current[3] $I_{Rated\ 500\ V}$ (with V_{mains} = 3 × AC 500 V)		AC 13 A	AC 19 A	AC 26 A	AC 38 A	AC 72 A
Rated operation (100 %)[3]		0075	0110	0150/0300[4]	0220	0370/0450/0550[4]/0750[4]
Increased power (125 %)[3]		0055	0075	0110/0220[4]	0150	0300/0370/0450/0550[4]/0750[4]
Assignment to AC 230 V units						
Voltage drop at I_{Rated}	ΔV	< 18.5 % (19 %) at AC 230 V with f_{Amax} = 50 Hz (60 Hz)				
Rated throughput current[3] $I_{Rated\ 230\ V}$ (with V_{mains} = 3 × AC 230 V)		AC 29 A	AC 42 A	AC 56.5 A	AC 82.6 A	AC 156 A
Rated operation (100 %)[3]		0075	0110	0150/0300[4]	0220	0300
Increased power (125 %)[3]		0055	0075	0110/0220[4]	0150	0220/0300

1) Approved to UL/cUL in conjunction with MOVITRAC® frequency inverters. SEW-EURODRIVE will provide a certificate on request.

2) A reduction of 6 % I_{Rated} per 10 Hz applies above f_{AN} = 60 Hz for the rated through current I_{Rated}.

3) Only applies for operation without V_{DC} link connection. For operation with V_{DC} link connection, observe the project planning instructions in the MOVITRAC® system manual, section "Project Planning/Connecting the optional power components".

4) Connect **two HF...-... output filters in parallel** for operation with these MOVITRAC® units.

HF...-503 dimension drawing [mm (in)]:

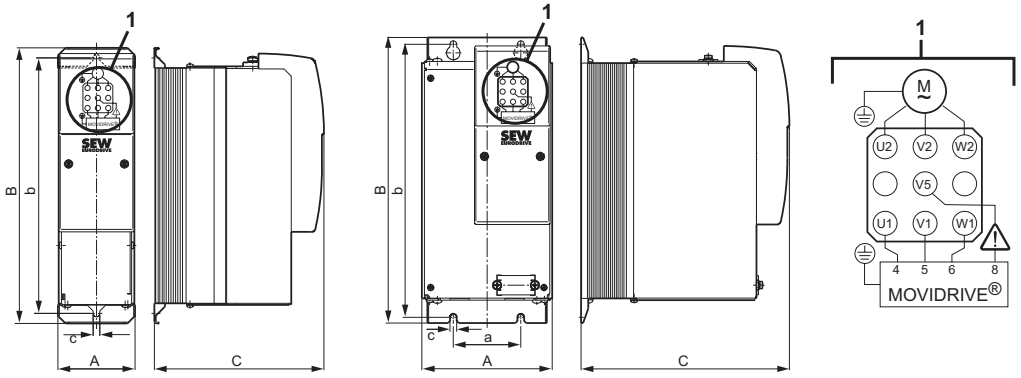

Type	Main dimensions		
	A	B	C
HF008 / 015 / 022 / 030-503	80 (3.2)	286 (11.3)	176 (6.9)
HF040 / 055-503	135 (5.3)	296 (11.7)	216 (8.5)

Type	Mounting dimensions		Hole dimension	Ventilation clearances	
	a	b	c	top	below
HF008 / 015 / 022 / 030-503		265 (10.4)	7 (0.28)	100 (3.9)	100 (3.9)
HF040 / 055-503	70 (2.8)	283 (11.1)	7 (0.28)	100 (3.9)	100 (3.9)

HF450-503 dimension drawing [mm (in)]:

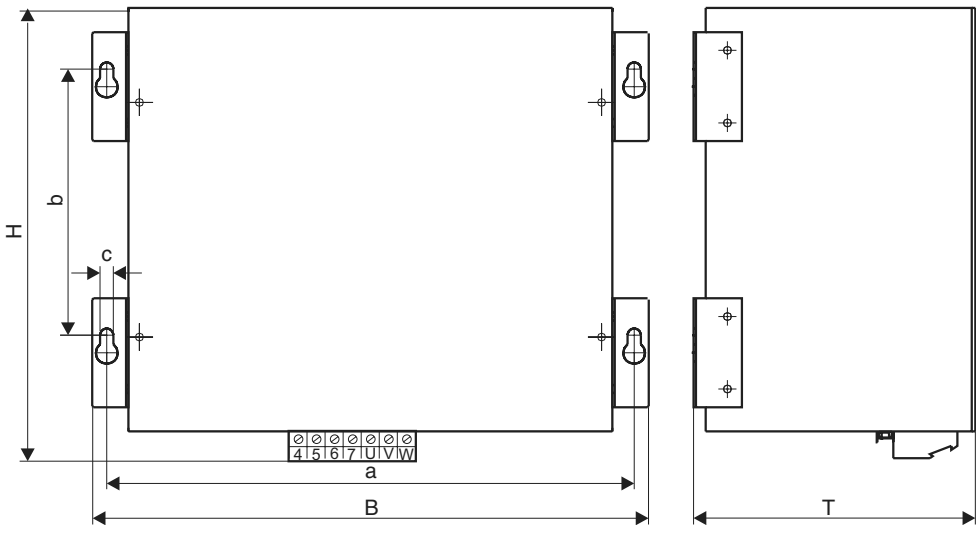

Only the mounting position shown in the dimension drawing is permitted

Output filter type	Main dimensions		
	W	H	D
HF450-503	465 (18.31)	385 (15.16)	240 (9.45)

Output filter type	Mounting dimensions		Hole dimension	Ventilation clearances	
	a	b	c	top	below
HF450-503	436 (17.17)	220 (8.66)	8.5 (0.33)	100 (3.94)	100 (3.94)

HF...-403 dimension drawing [mm (in)]:

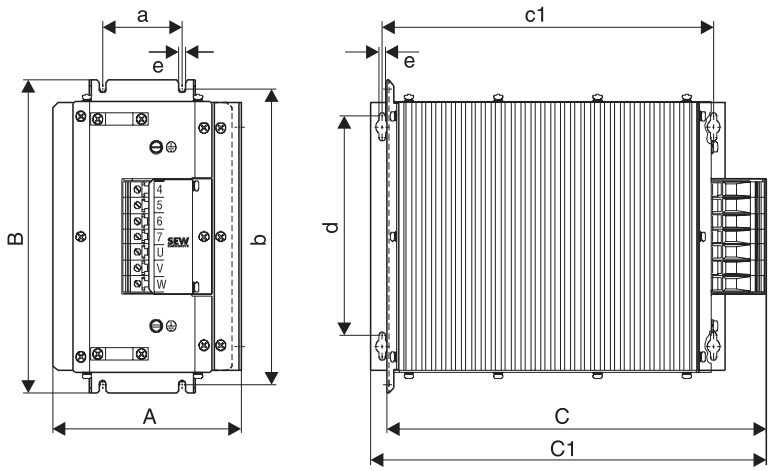

Type	Main dimensions			Standard installation	
	A	B	C/C1	b	a
HF023-403	145 (5.7)	284 (11.2)	365/390 (14.4/15.4)	268 (10.6)	60 (2.4)
HF033-403					
HF047-403	190 (7.5)	300 (11.8)	385/400 (15.2/15.6)	284 (11.2)	80 (3.2)

Type	Horizontal mounting position		Hole dimension	Ventilation clearances		
	d	c1	e	at side	top	below
HF023-403	210 (8.3)	334 (13.2)	6.5 (0.3)	30 (1.2)	150 (5.9)	150 (5.9)
HF033-403						
HF047-403						

4.24 Fieldbus connection

4.24.1 Fieldbus gateways

The fieldbus gateways convert standard fieldbuses into the SEW SBus. This means that up to 8 inverters can be triggered using one gateway.

The controller (PLC or PC) and the MOVITRAC® B frequency inverter exchange process data such as a control word or speed using the fieldbus. You need an FSC11B communication option for connecting the MOVITRAC® B unit to the fieldbus gateway. This is also necessary if the gateway is integrated in the inverter. The FIO11B module cannot be used for connecting.

In general, you can also connect and operate other SEW units (such as MOVIDRIVE® drive inverters) using the SBus.

There are two different versions of gateway functionality:

Integrated in the inverter: The DFx..B field bus card is mounted in the inverter.

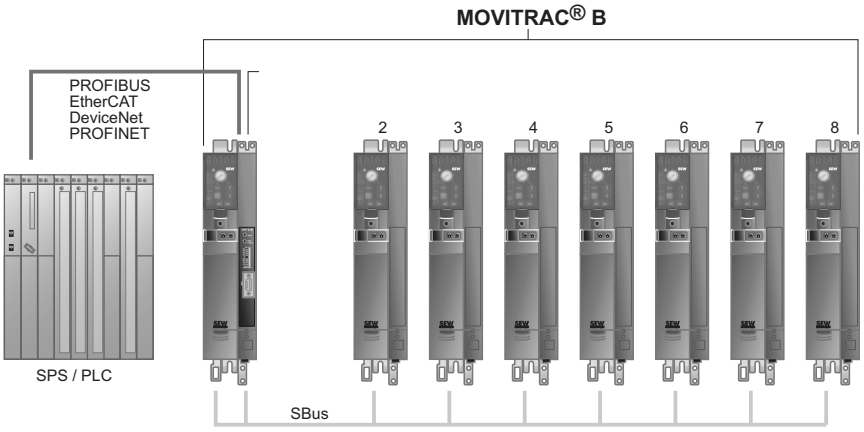

In the separate housing: The DFx..B fieldbus card is installed in a UOH11B housing or available as a gateway (UFI11A).

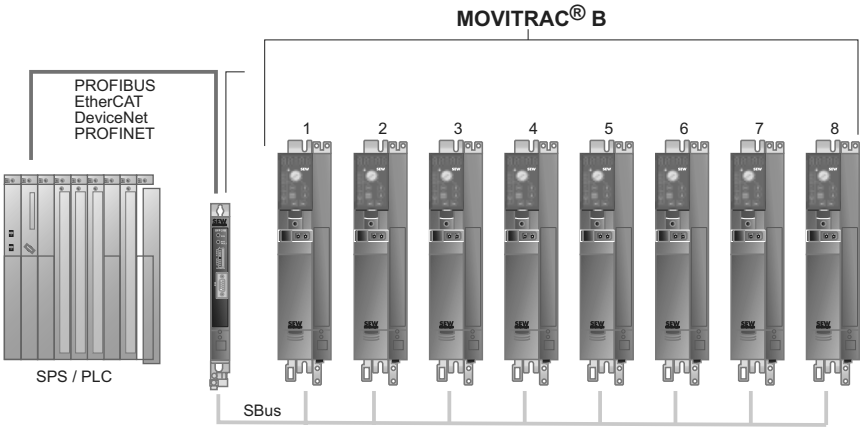

Gateways are available for the following bus systems for connection to fieldbuses.

Bus	Separate housing	Integrated in inverter
PROFIBUS	DFP21B / UOH11B	MC07B.../FSC11B/DFP21B
EtherCAT	DFE24 / UOH11B	MC07B.../FSC11B/DFE24B
DeviceNet	DFD11 / UOH11B	MC07B.../FSC11B/DFD11B
PROFINET	DFE32 / UOH11B	MC07B.../FSC11B/DFE32B
INTERBUS	UFI11A (823 898 7)	–

MOVITRAC® B must be supplied with DC 24 V at terminals X12.8 and X12.9 when it supplies the gateways.

Operating principle

The fieldbus gateways have standardized interfaces. Connect lower-level MOVITRAC® B units to the fieldbus gateway via the SBus unit system bus.

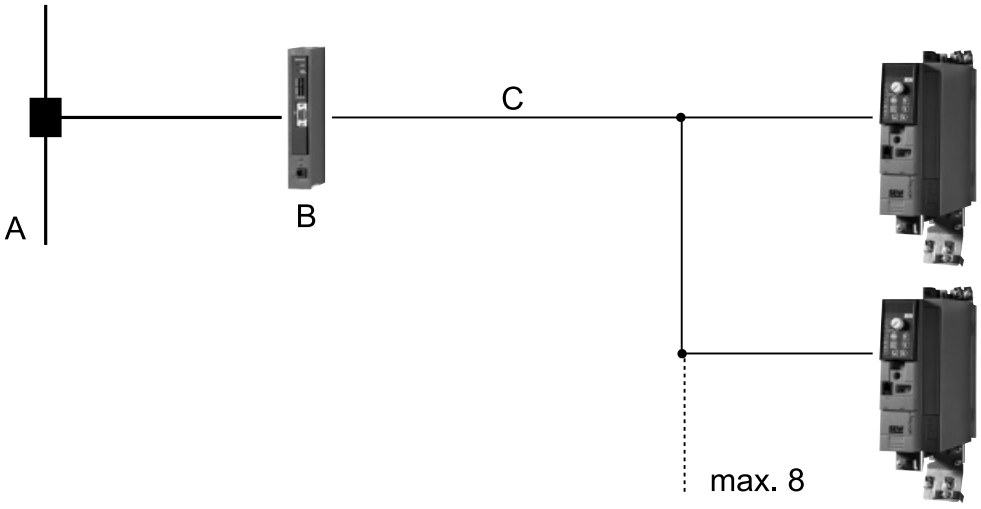

A = Fieldbus
B = Gateway
C = SBus

MOVITRAC® B must be supplied with DC 24 V at terminals X12.8 and X12.9 when it supplies the DFP21B.

Front view of MOVITRAC® B / UOH 11B	Description	Function
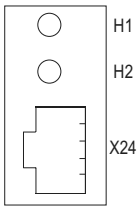	LED H1 (red)	System error (only for gateway functions)
	LED H2 (green)	Reserved
	X24 X terminal	RS-485 interface for diagnostics via PC and MOVITOOLS® MotionStudio

4.24.2 PROFIBUS DFP21B fieldbus interface

Description

The MOVITRAC® B drive inverter enables you to use the DFP21B option to connect to higher-level automation systems via PROFIBUS thanks to its powerful, universal fieldbus interface.

Refer to the publication "Fieldbus interface DFP21B PROFIBUS DP-V1" for installation.

Electronics data

DFP21B option		
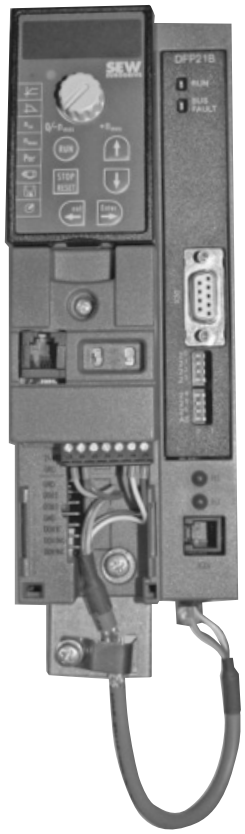	**Part number**	824 240 2
	Power consumption	P = 3 W (0.004 HP)
	PROFIBUS protocol options	PROFIBUS DP and DP-V1 to IEC 61158
	Automatic baud rate detection	9.6 kbaud ... 12 Mbaud
	Connection technology	• Via 9-pin sub D plug • Pin assignment to IEC 61158
	Bus termination	Not integrated, implement using suitable PROFIBUS plug with terminating resistors that can be switched on.
	Station address	1 ... 125, adjustable via DIP switches
	GSD file name	• SEW_6003.GSD (PROFIBUS DP) • SEWA6003.GSD (PROFIBUS DP-V1)
	DP ID number	$6003_{hex} = 24579_{dec}$
	Application-specific parameter-setting data (Set-Prm application data)	• Length: 9 bytes • Hex parameter settings 00,00,00,06,81,00,00,01,**01** = DP diagnostics alarm = **OFF** • Hex parameter settings 00,00,00,06,81,00,00,01,**00** = DP diagnostics alarm = **ON**
	DP configurations for DDLM_Chk_Cfg	• F0hex = 1 process data word (1 I/O word) • F1hex = 2 process data words (2 I/O words) • F2hex = 3 process data words (3 I/O words) • 0hex, F5hex = 6 process data words (6 I/O words) • 0hex, F9hex = 10 process data words (10 I/O words) • F3hex, F0hex = parameter channel + 1 process data word (5 I/O words) • F3hex, F1hex = parameter channel + 2 process data words (6 I/O words) • F3hex, F2hex = parameter channel + 3 process data words (7 I/O words) • F3hex, F5hex = parameter channel + 6 process data words (10 I/O words) • F3hex, F9hex = parameter channel + 10 process data words (14 I/O words)
	Diagnostics data	• Max. 8 bytes • Standard diagnostics: 6 bytes

4.24.3 EtherCat DFE24B fieldbus interface

Description

The MOVITRAC® B frequency inverter enables you to use the DFE24B option to connect to higher-level automation systems via EtherCat thanks to its powerful, universal fieldbus interface.

Refer to the publication "MOVIDRIVE® MDX61B EtherCat DFE24B fieldbus interface" for installation.

Electronics data

DFE24B option	
Part number	1821 126 7
Power consumption	P = 3 W (0.004 HP)
Standards	IEC 61158, IEC 61784-2
Baud rate	100 Mbaud full duplex
Connection technology	2 × RJ45 (8x8 modular jack)
Bus termination	Not integrated because bus termination is automatically activated.
OSI Layer	EtherNet II
Station address	Setting via EtherCat master (→ Display with P093)
XML file name	SEW_DFE24B.xml
Vendor ID	0x59 (CANopenVendor ID)
EtherCAT services	• CoE (CANopen over EtherCAT) • VoE (Simple MOVILINK protocol over EtherCAT)
Firmware version of MOVITRAC® B	824 854 0.18 or higher (→ Display with P076)

4.24.4 DeviceNet DFD11B fieldbus interface

Description

The MOVITRAC® B frequency inverter together with the DFD11B option and its high-performance universal fieldbus interface enable the connection to higher-level automation systems via the open and standardized DeviceNetfieldbus system.

Refer to the publication "MOVIDRIVE® MDX61B DeviceNet DFD11B fieldbus interface" for installation.

Electronics data

DFD11B option	
Part number	824 972 5
Power consumption	P = 3 W (0.004 HP)
Communication protocol	Master/slave connection set acc. to DeviceNet specification version 2.0
Number of process data words	Adjustable via DIP switches: • 1 ... 10 process data words • 1 ... 4 process data words with Bit-Strobe I/O
Baud rate	125, 250 or 500 kbaud, to be set via DIP switches
Bus cable length	For thick cable according to DeviceNet specification 2.0 Appendix B • 500 m (1640 ft) at 125 kbaud • 250 m (820 ft) at 250 kbaud • 100 m (328 ft) at 500 kbaud
Transmission level	ISO 11 98 - 24 V
Connection technology	• 2-wire bus and 2-wire supply voltage DC 24 V with 5-pole Phoenix terminal • Pin assignment according to DeviceNet specification
MAC-ID	0 ... 63, can be set using DIP switch Max. 64 participants
Supported services	• Polled I/O: 1 ... 10 words • Bit-Strobe I/O: 1 ... 4 words • Explicit message: – Get_Attribute_Single – Set_Attribute_Single – Reset – Allocate_MS_Connection_Set – Release_MS_Connection_Set
Firmware version of MOVITRAC® B	Firmware version 824 854 0.11 or above (→ Display with P076)

4.24.5 PROFINET DFE32B fieldbus interface

Description

The MOVITRAC® B frequency inverter enables you to use the DFE32B PROFINET IO option to connect to higher-level automation systems via PROFINET IO thanks to its powerful, universal fieldbus interface.

Refer to the publication "MOVIDRIVE® MDX61B PROFINET DFE32B fieldbus interface" for installation.

Electronics data

DFE32B option	
Part number	1821 345 6
Power consumption	P = 3 W (0.004 HP)
Application protocol	• **PROFINET IO** (Ethernet frames with frame identification 8892_{hex}) to control and set parameters for the drive inverter. • **HTTP** (Hypertext Transfer Protocol) for diagnostics using a Web browser. • **SMLP** (Simple Movilink Protocol), protocol used by MOVITOOLS. • **DHCP** (Dynamic Host Configuration Protocol) to assign address parameter automatically.
Port numbers used	• 300 (SMLP) • 80 (HTTP) • 67 / 68 (DHCP)
EtherNet services	• ARP • ICMP (Ping)
ISO / OSI layer 2	Ethernet II
Baud rate	100 Mbaud in full duplex process
Connection technology	RJ45
Addressing	4 byte IP address or MAC-ID (00:0F:69:xx:xx:xx)
Manufacturer ID (Vendor ID)	$010A_{hex}$
Firmware version of MOVITRAC® B	Firmware version 824 854 0.17 or above (→ Display with P076)

4.25 MOVI-PLC®

4.25.1 Unit types

The MOVI-PLC® controller is available in different versions, which differ in the modules available from a range of libraries. Refer to the publication "MOVI-PLC® Control" for installation.

Unit design MOVI-PLC®		Description
MOVI-PLC® basic	DHP11B-T0	MOVI-PLC® basic controller
	DHP11B-T1[1)]	Application version I (in addition to version T0, enables additional functions including electronic cam and synchronous operation)
	DHP11B-T2[1)]	Application version II (in addition to version T1, enables additional functions including handling)
MOVI-PLC® advanced	DHE41B	Functionality of MOVI-PLC® basic, but also enormous power reserves and high-speed interfaces.

1) Versions T1 and T2 are only partly useful together with MOVITRAC® B. Please contact SEW-EURODRIVE in this case.

4.25.2 Description

With the MOVI-PLC® basic DHP11B controller, SEW-EURODRIVE's product portfolio offers a user-programmable controller compliant with the IEC 61131-3 and PLCopen standards for the first time.

The DHP11B option is available starting with size 0S (0.55 kW [0.74 HP]) It is not available in the size 0XS (0.25 and 0.37 kW [0.34 and 0.50 HP]).

The DHP11B option is integrated ex works or supplied in a separate UOH housing. Only SEW-EURODRIVE can carry out an expansion of the unit with this option.

The MOVI-PLC® DHP11B.. controller is equipped with a PROFIBUS-DPV1 slave interface, 2 SBus interfaces (CAN), RS-485, and 8 digital inputs / outputs, of which 5 are interruptible. DHP11B can control 12 units simultaneously (MOVIDRIVE®, MOVITRAC®, MOVIMOT®).

4.25.3 Electronics data

MOVI-PLC® basic DHP11B electronics data:

Status displays	LEDs for I/O voltage supply, firmware, program, PROFIBUS, system busses
Fieldbus	• PROFIBUS DP and DPV1 to IEC 61158 • Automatic baud rate detection from 9.6 kbaud to 12 Mbaud • Implement bus connection with suitable connector • GSD file SEW_6007.GSD • DP ident. number 6007_{hex} (24579_{dec}) • Maximum 32 process data
System bus	• 2 system buses (CAN) for control of 12 inverters and CANopen I/O modules • CAN layer 2 (SCOM cyclic, acyclic) or via the SEW-MOVILINK® protocol • Baud rate: 125 kbaud ... 1 Mbaud • External bus terminator • Address range: 0 ... 127
Engineering	Via RS-485, PROFIBUS and the system buses
Panel operation	Via RS-485 and CAN 2 (in preparation)
Connection technology	• PROFIBUS: 9-pole sub-D connector according to IEC 61158 • System buses and I/Os: plug-in terminals • RS-485: RJ10
Binary inputs / outputs	8 I/Os to IEC 61131-2; can be configured as inputs or outputs. Five are interrupt-capable
Memory	• Program: 512 kByte • Data: 128 kByte • Retain: 24 kByte
Tools for startup	MOVITOOLS® MotionStudio with integrated PLC editor (Programming languages AWL, ST, KOP, FUP, CFC, AS; libraries to optimize control of the inverters)

4.26 UWU52A switched-mode power supply

UWU52A switched-mode power supply	
Part number	188 181 7
Input voltage	1 × AC 110 V ... AC 240 V
Voltage range	AC 95 ... 265 V, DC 110 ... 300 V
Frequency	50/60 Hz
Max. no-load current	AC 40 mA
Rated input current at 1 × AC 110 V at 1 × AC 230 V	 AC 1.04 A AC 0.63 A
Output voltage	DC 24 V (–1 % / +3 %)
Rated output current at 40 °C (104 °F) at 55 °C (131 °F)	 DC 2.5 A DC 2.0 A
Residual ripple	< 50 mV_{eff}
Interference voltage	< 120 mV_{SS}
Power loss	< 5.5 W (0.0074 HP)
Mass	0.23 kg (0.51 lb)
Working temperature	0 ... +55 °C (32 ... 131 °F) (non-condensing)
Enclosure	IP20 (EN 60529)
Protection class	I
Connection	Screw terminals for line cross section 0.20 ... 2.5 mm^2

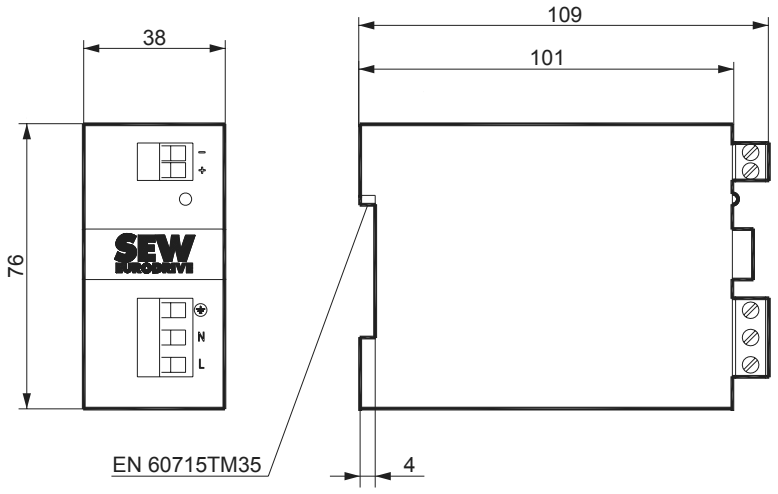

5 Parameters

As a rule, you only set the parameters during startup and if servicing is required. You can set the MOVITRAC® B parameters in various ways:

- With the keypad
- With the MOVITOOLS® MotionStudio programs on a PC using the RS-485 interface
- Copying the parameters with the keypad

If you set the parameters other than the factory setting: Enter changes in the parameter list in the "Startup" section.

5.1 Explanation of the parameters

If a choice is offered, the factory setting is indicated in **bold**.

The parameters for motor startup are described in the section "Startup with the FBG keypad".

The parameters can be selected on the FBG11B keypad as follows:

Selection in long menu

Selection in short and long menu

Direct selection in FBG11B keypad

Selection in the FBG motor startup

The following symbols explain the parameters:

These parameters are switch-selectable and available in parameter sets 1 and 2.

These parameters can only be changed with INHIBITED inverter status (= output stage at high resistance).

The startup function automatically changes this parameter.

No.	FBG	Name	Description
0__		**Display values**	
00_		**Process values**	
000		Speed (signed) [rpm]	The displayed speed is the calculated actual speed.
002		Frequency (signed) [Hz]	Output frequency of the inverter.
004		Output current (amount) [% I_{Rated}]	Apparent current in the range 0 ... 200 % of the rated unit current.
005		Active current (signed) [% I_{Rated}]	Active current in the range 0... 200 % of the rated unit current. The display value is positive when torque is in positive direction of rotation; negative when torque is in negative direction of rotation.
008		DC link voltage [V]	DC link voltage.
009		Output current [A]	Apparent current at the inverter output, displayed in AC A.

No.	FBG	Name	Description
01_		**Status displays**	
010		Inverter status	Status of the unit output stage: • INHIBITED • ENABLED
011		Operating status	The following operating statuses are available: • 24 V OPERATION • CONTROLLER INHIBIT • NO ENABLE • CURRENT AT STANDSTILL • ENABLE • FACTORY SETTING • FAULT
012		Fault status	Fault number and fault in plain text.
013		Current parameter set	Parameter set 1 or 2.
014	Lon6	Heat sink temperature [°C]	Heat sink temperature of the inverter.
02_		**Analog setpoints**	
020	Lon6	Analog input AI1 [V]	Voltage 0 ... + 10 V at analog input AI1. When S11 = ON and *P112 AI1 operating mode*: • *= NMAX, 0 ... 20 mA*: Display 0 ... 10 V = 0 ... 20 mA • *= NMAX, 4 ... 20 mA*: Display 2 ... 10 V = 4 ... 20 mA
021	Lon6	Analog input AI2 (optional)	Unit: [V] Voltage (–10 V ... +10 V)
03_		**Binary inputs**	
030		Binary input DI00	Status of binary input DI00 (Fault reset = factory setting)
031		Binary input DI01	Status of binary input DI01 (CW/STOP= fixed assignment)
032		Binary input DI02	Status of binary input DI02 (CCW/STOP = factory setting)
033		Binary input DI03	Status of binary input DI03 (ENABLE = factory setting)
034		Binary input DI04	Status of binary input DI04 (n11/n21 = factory setting)
035		Binary input DI05	Status of binary input DI05 (n12/n22 = factory setting)
039	Lon6	Binary inputs DI00 ... DI05	Collective display of binary inputs.
05_		**Binary outputs**	
051		Binary output DO01	Status of binary output DO01 (/FAULT = factory setting)
052		Binary output DO02	Status of binary output DO02 (BRAKE RELEASED = factory setting)
053		Binary output DO03	Status of binary output DO03 (READY FOR OPERATION = factory setting)
059	Lon6	Binary outputs DO01 ... DO03	Collective display of binary outputs.
07_		**Unit data**	
070		Unit type	The unit type is displayed, e.g. MC07B0008-2B1
071		Rated output current [A]	The rated unit current is displayed in [A]
076		Firmware basic unit	Part number and firmware version
077		DBG firmware	Part number and firmware version
08_		**Fault memory**	
080 ... 084	Lon6	Error t-0 ... Error t-4 (FBG11B keypad: only error t-0)	The unit saves the following information when an error occurs. MOVITOOLS® MotionStudio can display this information if required: • P036/P053 Status of binary inputs/binary outputs • P013 Current parameter set • P011 Operating status of the inverter • P010 Inverter status • P014 Heat sink temperature • P000 Speed • P004 Output current • P005 Active current • Unit utilization • P008 DC link voltage

No.	FBG	Name	Description
09_		**Bus diagnostics**	
094	Lon6	PO 1 Setpoint [hex]	Process data output word 1, setpoint
095	Lon6	PO 2 Setpoint [hex]	Process data output word 2, setpoint
096	Lon6	PO 3 Setpoint [hex]	Process data output word 3, setpoint
097		PI 1 Actual value [hex]	Process data input word 1, actual value
098		PI 2 Actual value [hex]	Process data input word 2, actual value
099		PI 3 Actual value [hex]	Process data input word 3, actual value
1__		**Setpoints/ramp generators**	
10_		**Setpoint selection / Frequency input**	
100	Short	Setpoint source	0 / Bipolar / Fixed setpoint The setpoint is provided by the analog input or the fixed setpoints. The unit processes the fixed setpoints according to their value. The speed is limited by the maximum set speed P302/P312 for an open circuit. 5 ... 10 V setpoint results in CW rotation, 0 ... 5 V setpoint results in CCW rotation. You cannot use the analog input AI1 for this operating mode as a current input. **1 / Unipolar / Fixed setpoint** The setpoint is provided by the analog input or the fixed setpoints. The unit processes the fixed setpoints **according to their value**. The binary inputs specify the direction of rotation. 2/ RS-485 / Fixed setpoint The setpoint is provided by the RS-485 interface. The sign of the setpoint determines the direction of rotation. 4 / Motor potentiometer / Fixed setpoint Set the setpoint using appropriately programmed terminals *Motor pot. up* and *Motor pot. down*. The motor potentiometer is a virtual potentiometer that does not correspond to the setpoint potentiometer on the unit. 6 / Fixed setpoint + AI1 The setpoint is calculated by adding the selected fixed setpoint and analog input AI1. The binary inputs specify the direction of rotation. Furthermore, *P112 AI1* operating mode applies. 7 / Fixed setpoint * AI1 The value at analog input AI1 serves as the evaluation factor for the selected fixed setpoint (0 ... 10 V = 0 ... 100 %). If no fixed setpoint is selected, n_{min} applies. The binary inputs specify the direction of rotation. 10 / SBus 1 / Fixed setpoint The system bus specifies the setpoint. The sign of the setpoint determines the direction of rotation.

No.	FBG	Name	Description
100	Short	Setpoint source	11 / Frequency setpoint input / Fixed setpoint The frequency at binary input DI04 specifies the setpoint. The value is set using parameter *P102 Frequency scaling*. You can influence the value with *P110 AI1 scaling*. The following parameters are included in the scaling if the PI controller is activated: • *P254 PI actual value scaling* • *P255 PI actual value offset* The pulse duty factor (pulse width of the high and low signal) should be about 1 : 1. The factor determines the rising edge and the falling edge of the input signal. Use P102 Frequency scaling to determine at which input frequency the system setpoint 100 % is reached. The reference of the system setpoint is set via P112 AI1 operation mode. The direction of rotation is set via the binary inputs CW/STOP and CCW/STOP. Frequency scaling / Minimum response time (delay) / Resolution Frequency input 25 ... 120 kHz / 20 ms / 50 Hz 12.5 ... 24.99 kHz / 40 ms / 25 Hz 10 ... 12.49 kHz / 60 ms / 16.7 Hz 1 ... 9.99 kHz / 500 ms / 2 Hz **Setpoint cascade** 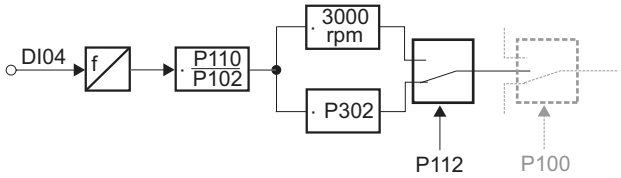 P302: Maximum speed in rpm P110: Gain 0.1 ... 1 ... 10 P102: Frequency scaling 1 ... 120 kHz P112: Operation mode setpoint Example: A setpoint generator with the value range 1 ... 50 kHz is to set the motor speed of 30 ... 1500 rpm. Set the following parameters for this: • P102 Frequency scaling: 50 kHz • P112 Operation mode setpoint: 3000 rpm • Setpoint scaling P110: 0.5 14 / Bipolar AI2 / Fixed setpoint The setpoint is provided by the optional analog input AI2 or the fixed setpoints. The unit processes the fixed setpoints according to their value.
101	Short	Control signal source	**0 / Terminals** The binary inputs determine the control. 1 / RS-485 The RS-485 interface and the binary inputs determine the control. 3 / SBus The system bus and the binary inputs determine the control. 4 / 3-Wire-Control The 3-wire control principle determines the control. In this case, the enable and direction of rotation signals will respond edge-controlled. • Connect start key CW with contact to binary input "CW/Stop". • Connect start key CCW with contact to binary input "CCW/Stop". • Connect stop key with normally open input "Enable/Stop". If you connect CW and CCW at the same time, the drive decelerates with downwards ramp P131/P141. If the *3-WIRE-CONTROL* control signal source is active and the drive is started by a start edge: You can stop the drive using the STOP button when the RUN/STOP buttons are enabled. Then you can restart the drive with the RUN button without another start edge being required. The unit stores a start edge if you stop the drive with the stop button. If you then press the RUN key, the unit will enable the drive immediately.

No.	FBG	Name	Description
		Control source 3-WIRE CONTROL 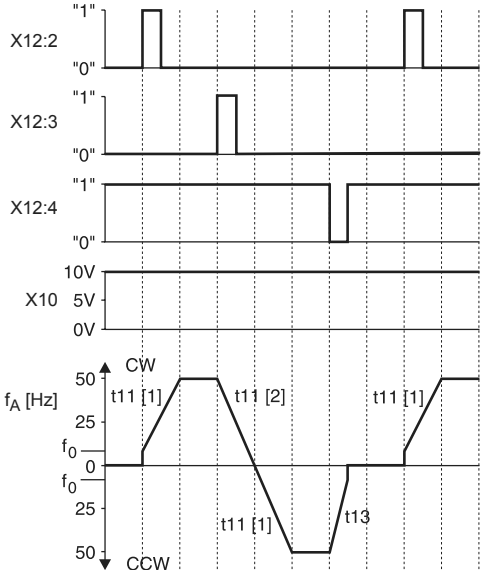 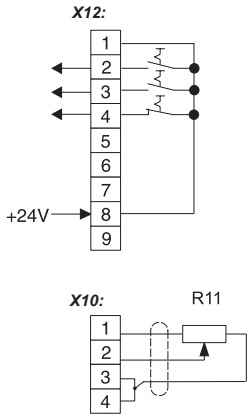	X12:2 = CW/Stop X12:3 = CCW/Stop X12:4 = Enable/Stop X10 = Setpoint input AI f_{out} = Output frequency f_0 = Start/stop frequency CW = Clockwise CCW = Counterclockwise t11 [1] = t11 UP t11 [2] = t11 DOWN t13 = Stop ramp
102	Lan6	New f_{FI1max} Frequency scaling	Setting range: 0.1 ... **10** ... 120.00 [kHz]
103	Lan6	FI1 reference (as of firmware .13)	**0 / n_{max}** 1 / n_{ref}
104	Lan6	Setpoint reference speed $n_{ref.}$ (as of firmware .13)	Setting range: 0 ... **3000** ... 6000 rpm
105	Lan6	Open circuit detection (as of firmware .12)	0 / No response 2 / Immediate stop / Fault The inverter performs an emergency stop with an error message. The inverter inhibits the output stage and the brake is applied. The inverter revokes the ready signal and sets the programmed error output. A restart is only possible after an error reset has been performed during which the inverter is reinitialized. 4 / Rapid stop / fault The inverter brakes the drive using the specified stop ramp (P136 / P146). The inverter uses DC braking in 2-quadrant mode. Once the stop speed is reached, the inverter inhibits the output stage and the brake is applied. The error is signaled immediately. The inverter revokes the ready signal and sets the programmed error output. A restart is only possible after an error reset has been performed during which the inverter is reinitialized. **7 / Rapid stop / Warning** The error response corresponds to STOP/FAULT, except the inverter does not revoke the ready signal and the error output is set.
FI1 characteristic curve frequency input			
The frequency input can be configured as of firmware .13 using a characteristic curve: 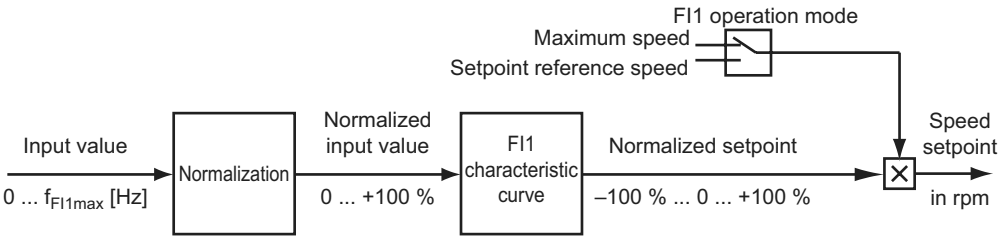			
106	Lan6	FI1 characteristic curve x1 (as of firmware .13)	Setting range: **0** ... 100 %

No.	FBG	Name	Description
107		FI1 characteristic curve y1 (as of firmware .13)	Setting range: –100 % ... **0** ... +100 %
108		FI1 characteristic curve x2 (as of firmware .13)	Setting range: 0 ... **100** %
109		FI1 characteristic curve y2 (as of firmware .13)	Setting range: –100 ... 0 ... **+100** %
		A 2-point characteristic curve is described by the coordinates x1/y1 and x2/y2, with which the FI1 frequency input is evaluated. 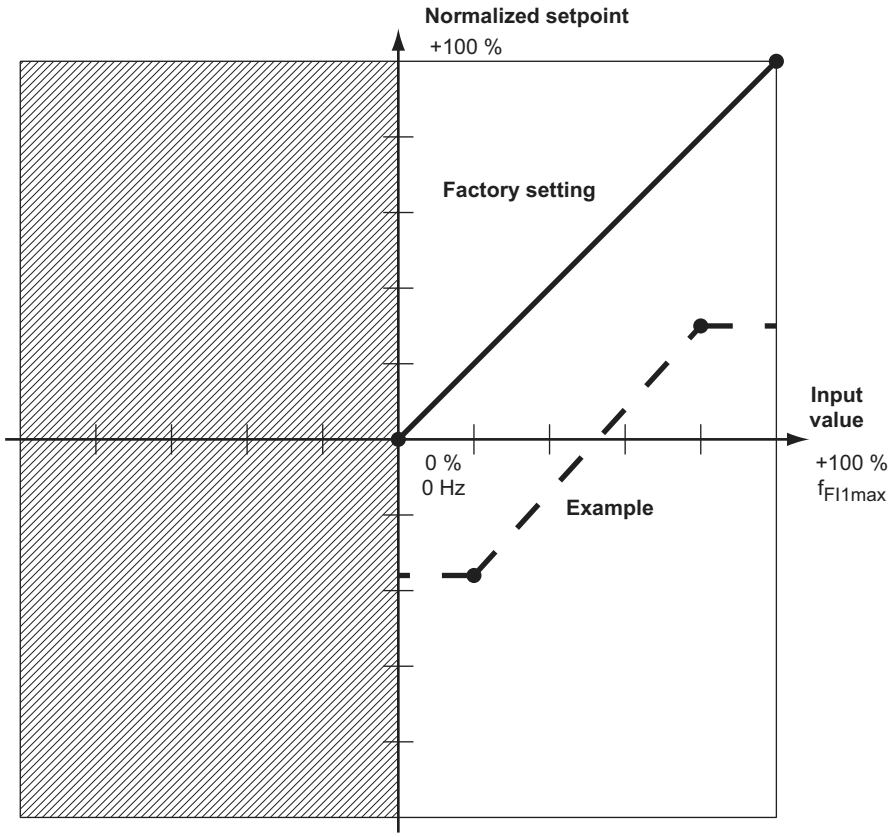	
11_		**Analog input 1 (0 ... +10 V)**	
		The analog input can be configured as of firmware .12 using a characteristic curve: 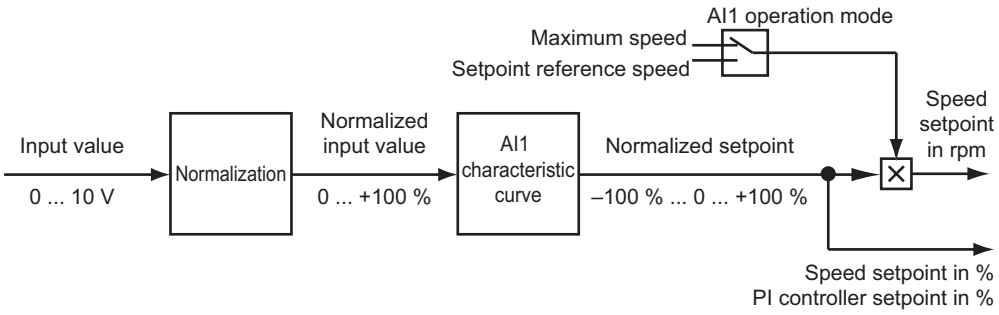	

No.	FBG	Name	Description
110	Short	AI1 scaling (up to firmware .12)	Setting range: 0.1 ... **1** ... +10. Is used to define the slope of the setpoint characteristic curve. If you set the scaling to the value "1", then the input voltage V_1 = 10 V at the analog input corresponds to the operating mode of the analog input (P112). This is the speed 3000 rpm or the set maximum speed (P302). 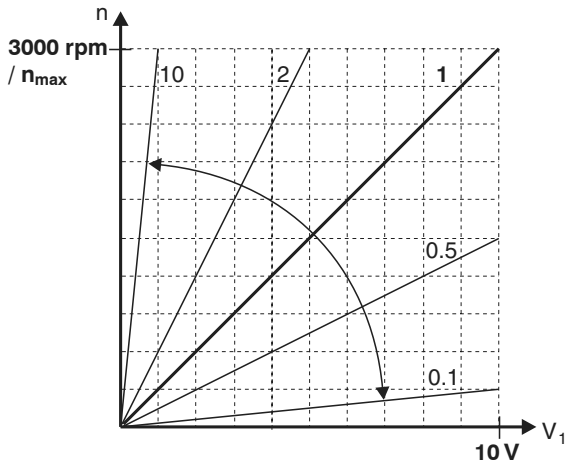 *Slope of the setpoint characteristic curve* You can only use the first quadrant with a unipolar setpoint source. Negative setpoint selections create the setpoint zero. **P110 AI1 scaling has no effect if you set the Current Input operating mode. You set the Current Input operating mode by setting P112 AI1 to NMAX, 0-20 mA or NMAX, 4-20 mA.**
112	Short	AI1 Operating mode Safety against open circuit is only available in operating mode 4 ... 20 mA. Selection "0" and "2" available present up to firmware .12.	**1 / 10 V, Reference maximum speed** Voltage input with reference n_{max} (0 ... 10 V = 0 ... n_{max}). You can adapt the characteristic curve with *AI1 scaling*. Switch S11 = V. 5 / 0 ... 20 mA, reference maximum speed Current input 0 ... 20 mA = 0 ... n_{max}. *P110 AI1 scaling* is ineffective. Switch S11 = mA. 6 / 4 ... 20 mA, reference maximum speed Current input 4 ... 20 mA = 0 ... n_{max}. *P110 AI1 scaling* is ineffective. Switch S11 = mA. 7 / 0 ... 10 V, n-reference 8 / 0 ... 20 mA, n-reference 9 / 4 ... 20 mA, n-reference

No.	FBG	Name	Description
113	Lon6	AI1 voltage offset (up to firmware .12)	Setting range: –10 V ... **0** ... +10 V The point where the setpoint characteristic passes through zero can be moved along the V_E axis. 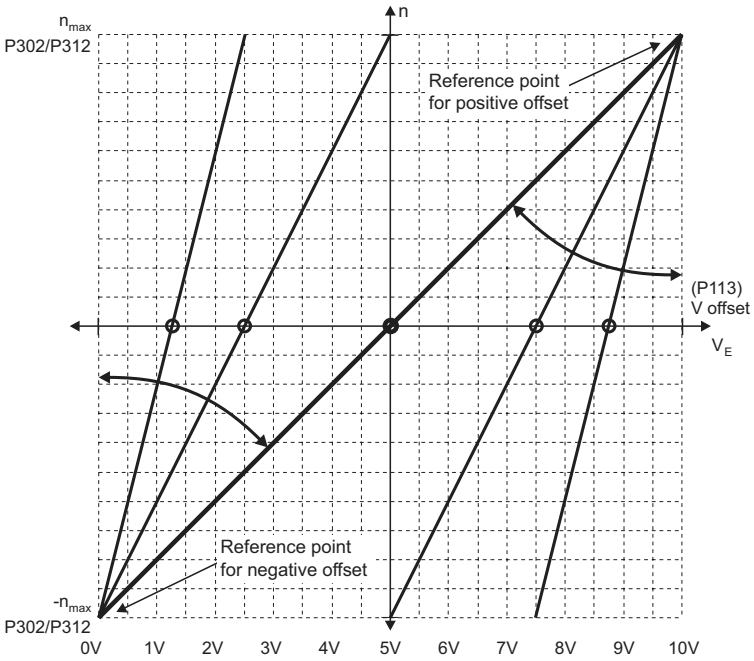
116	Short	AI1 characteristic curve x1 (as of firmware .13)	Setting range: **0** ... 100 %
117	Short	AI1 characteristic curve y1 (as of firmware .13)	Setting range: –100 % ... **0** ... +100 %
118	Short	AI1 characteristic curve x2 (as of firmware .13)	Setting range: 0 ... **100** %
119	Short	AI1 characteristic curve y2 (as of firmware .13)	Setting range: –100 ... 0 ... **+100** %

No.	FBG	Name	Description
		A 2-point characteristic curve is described by the coordinates x1/y1 and x2/y2, with which the AI1 analog input is evaluated. 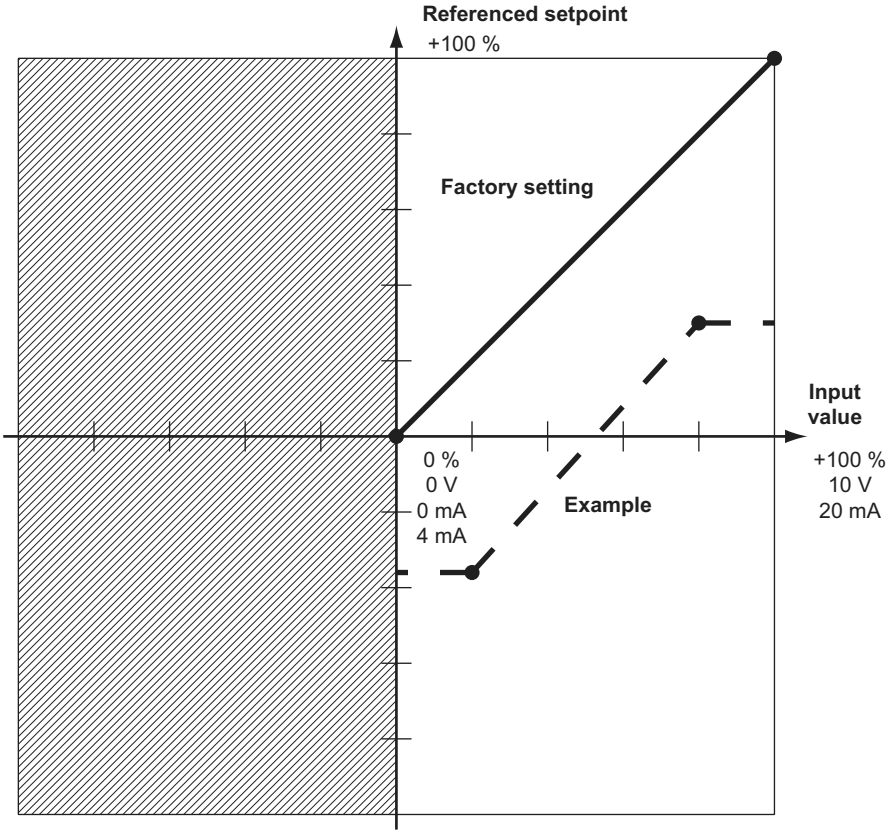	
12_		**Analog input AI2 / FBG setpoint control module (option)**	
		Analog input AI2 is only available with the optional analog module FIO11B. 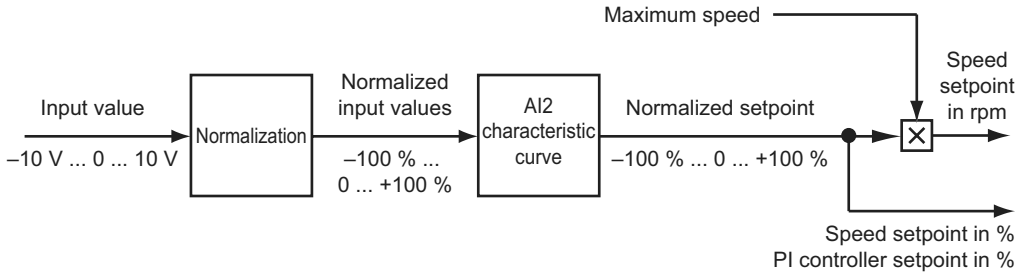	
120	Lan6	AI2 operating mode	**0 / No function** The setpoint at AI2 is not used; the external current limitation is set to 100 %. 1 / 0 ... ±10 V + Setpt / 100 % corresponds to n_{max} The evaluated setpoint at AI2 is added to setpoint 1 (= AI1) observing the signs; the external current limitation is set to 100 % I_{max}. 2 / 0 ... 10 V current limit / 100 % corresponds to I_{max} The input serves as external current limitation.

No.	FBG	Name	Description
121		Addition FBG setpoint control module	**0 / Off** The unit does not take into account the value from the setpoint generator of the FBG11 keypad. 1 / ON The value from the setpoint generator of the FBG11 keypad is added to any set setpoint source bipolar/fixed setpoint, unipolar/fixed setpoint, RS-485/fixed setpoint, frequency input/fixed setpoint or SBus/fixed setpoint. The addition also affects fixed setpoints. 2 / On (without fixed setpoint) The value from the setpoint generator of the FBG11 keypad is added to any set setpoint source bipolar/fixed setpoint, unipolar/fixed setpoint, RS-485/fixed setpoint, frequency input/fixed setpoint or SBus/fixed setpoint. The addition does **not** act on **fixed setpoints**.
122		Direction of rotation FBG manual operation	Setting the setpoint with the setpoint generator of the FBG11 keypad in FBG manual mode. **0 / Unipolar CW** Adjustable speed: 0 ... + n_{max} 1 / Unipolar CCW Adjustable speed: 0 ... – n_{max} 2 / Bipolar CW and CCW Adjustable speed: – n_{max} ... + n_{max}
126		AI2 characteristic curve x1	Setting range –100 % ... **0** ... +100 % (–10 V ... **0** ... +10 V)
127		AI2 characteristic curve y1	Setting range –100 % ... **0** ... +100 % (–n_{max} ... **0** ... +n_{max} / **0** ... I_{max})
128		AI2 characteristic curve x2	Setting range –100 % ... 0 ... **+100 %** (–10 V ... 0 ... +**10 V)**
129		AI2 characteristic curve y2	Setting range –100 % ... 0 ... **+100 %** (–n_{max} ... 0 ... +$\mathbf{n_{max}}$ / 0 ... $\mathbf{I_{max}}$)

No.	FBG	Name	Description
		The characteristic curve is described by the coordinates x1/y1 and x2/y2, with which the analog input is evaluated. 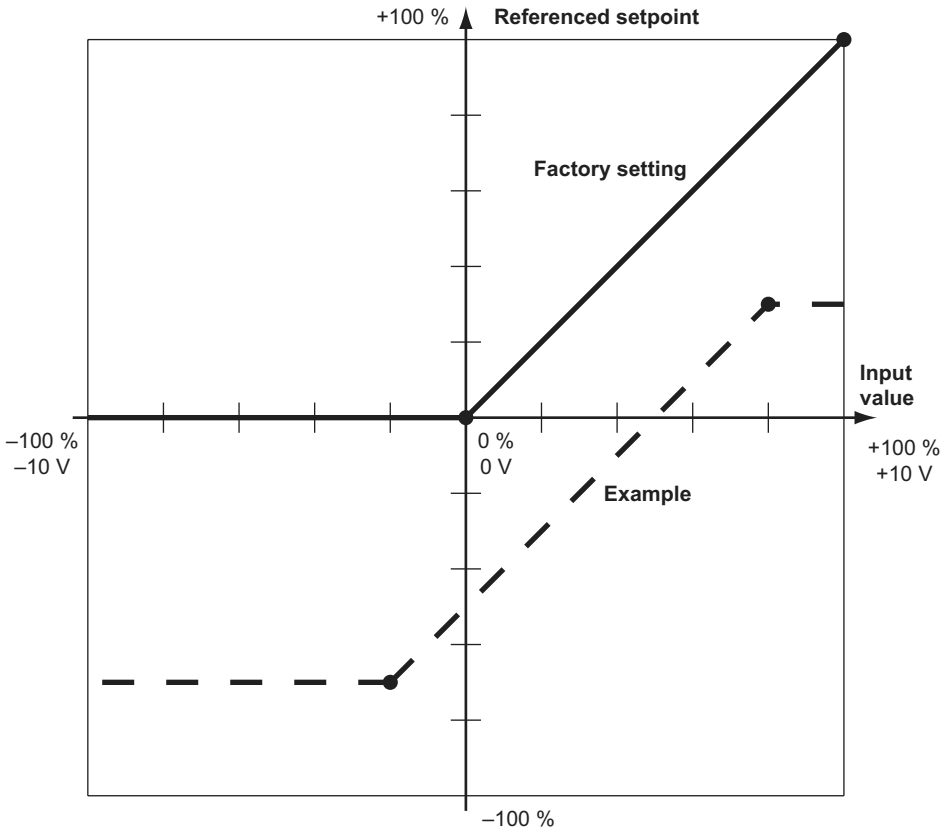	
13_ / 14_		**Speed ramps 1 / 2**	
The ramp times refer to a setpoint change of Δn = 3000 rpm. Ramps t11/t21 up and t11/t21 down are effective when the setpoint is changed. The stop ramp t13/t23 is in effect when the enable is withdrawn by pressing the STOP/RESET key or via the terminals.			
130 / 140	1 2	Ramp t11/t21up	Setting range 0 ... **2** ... 2000 [s]; Acceleration ramp
131 / 141	1 2	Ramp t11/t21 down	Setting range 0 ... **2** ... 2000 [s]; Deceleration ramp
134 / 144	Lon6 1 2	Ramp t12 / t22 up = down (In preparation)	Setting range 0 ... **10** ... 2000 [s] The following applies to this ramp: UP = DOWN and CW = CCW. Ramps t12/t22 are activated via a binary input (→ P601 ... P608), which is set to the function "Ramp switchover".
136 / 146	Lon6 1 2	Stop ramp t13/t23 up = down	Setting range 0 ... **2** ... 20 [s]; Stop ramp when switching to the NO ENABLE operating status

No.	FBG	Name	Description
139 / 149		Ramp monitoring 1 / 2 (In preparation)	Setting range: YES/**NO** If you set the deceleration ramps to a value that is a lot shorter than can be physically accomplished in this system, the turning drive will be stopped after expiration of the monitoring time. Such a setting will cause a fault signal and increase brake wear. This step also entails an increased setting of the respective ramp, if the ramp timeout definitely appears in form of a preset ramp that cannot be traveled. This parameter is an additional monitoring function for speed monitoring. This parameter only applies to the downwards ramp. This means the parameter can be used to monitor the downwards ramp, stop ramp or emergency stop ramp if speed monitoring is not desired.
15_		**Motor Potentiometer Function** (see *P100 Setpoint source*) The ramp times refer to a setpoint change of ∆n = 3000 rpm.	
150		Ramp t3 up = down	Setting range 0.2 ... **20** ... 50 [s] The ramp takes effect when the *Motor pot. up* and *Motor pot. down* terminal functions are used.
152		Save last setpoint	**off / OFF** The inverter starts with n_{min}: • After power off and on • After revoking the enable You must set *P152 Save last setpoint* = *OFF* if you are using the motor potentiometer for continuous speed control. Otherwise, after approx. 100,000 storage operations, the fault message F25 EEPROM will appear. Store only after setpoint change. on / ON The inverter starts with the last motor potentiometer setpoint to have been set: • After power off and on • After revoking the enable
16_ / 17_		**Fixed setpoints 1 / 2**	
You can activate the fixed setpoints via the binary inputs DI02 ... DI05 with the arguments n11/n21 / n12/n22 and FIXED SETP. CHANGE (parameter 60_). You activate the fixed setpoints n13/n23 by assigning the functions n11/n21 and n12/n22 to two binary inputs and applying a "1" signal to the two inputs.			
160 / 170		Internal setpoint n11 / n21	Setting range –5000 ... **150** ... 5000 [rpm]
161 / 171		Internal setpoint n12 / n22	Setting range –5000 ... **750** ... 5000 [rpm]
162 / 172		Internal setpoint n13 / n23	Setting range –5000 ... **1500** ... 5000 [rpm]
163 / 173		n11/n21 PI controller	Setting range 0 ... **3** ... 100 [%] (see sec. "Project Planning/PI controller")
164 / 174		n12/n22 PI controller	Setting range 0 ... **15** ... 100 [%] (see sec. "Project Planning/PI controller")
165 / 175		n13/n23 PI controller	Setting range 0 ... **30** ... 100 [%] (see sec. "Project Planning/PI controller")
2__		**Controller parameters**	
25_		**PI Controller** (see sec. "Project Planning/PI Controller" for explanations of the parameters)	
250		PI controller	**0 / Off** PI controller deactivated. 1 / Normal PI controller switched on normally. 2 / Inverted PI controller switched on inverted.
251		P-gain	Setting range 0 ... **1** ... 64
252		I-component	Setting range 0 ... **1** ... 2000 [s]

No.	FBG	Name	Description
253		PI actual value mode (up to firmware .12)	**1 / 10 V, reference maximum speed** 5 / 0 ... 20 mA, reference maximum speed 6 / 4 ... 20 mA, reference maximum speed 7 / 0 ... 10 V, n-reference 8 / 0 ... 20 mA, n-reference 9 / 4 ... 20 mA, n-reference
254		PI actual value scaling (up to .12)	0.1 ... **1.0** ... 10.0
255		PI actual value offset (up to .12)	**0.0** ... 100.0 [%]
3__		**Motor parameters**	
Use this parameter group to adjust the inverter to the motor.			
30_ / 31_		**Limits 1 / 2**	
300 / 310		Start/stop speed 1 / 2	Setting range 0 ... **60** ... 150 [rpm] For all operating modes except VFC & hoist, the setting is 0.5 x the rated slip of the connected motor. For the operating modes VFC & hoist, the setting is the rated slip of the connected motor. This entry defines the smallest speed request, which the inverter sends to the motor when enabled. The transition to the speed determined in the setpoint selection is made using the active acceleration ramp. When a stop command is performed, this setting also defines the slowest speed at which the motor energization is switched off or at which post-magnetization takes effect and the brake is applied.
301 / 311		Minimum speed 1 / 2	Setting range 0 ... **15** ... 5500 [rpm] The speed value, which must not be subceeded even when zero is selected as the setpoint. The minimum speed also applies when $n_{min} < n_{start/stop}$ has been set. Important: • The slowest speed is 15 rpm when the hoist function is active, even if n_{min} has been set to a lower value. • To enable the drive to move clear of the limit switches even at low speeds, n_{min} is not active for the hardware limit switch with which the drive has come into contact.
302 / 312		Maximum speed 1 / 2	Setting range 0 ... **1500** ... 5500 [rpm] No setpoint greater than the value set here can be selected. If you set $n_{min} > n_{max}$, then the value set in n_{max} applies to the minimum speed and the maximum speed. In the VFC and VFC + DC BRAKING operating mode, you may enter the following maximum speed values depending on the number of poles: • 2-pole: max. 5500 rpm • 4-pole: max. 4000 rpm • 6-pole: max. 2600 rpm • 8-pole: max. 2000 rpm Fault 08 *Speed monitoring* may appear if you enter higher values. The unit automatically sets the maximum speed to the transition speed if you perform startup.
303 / 313		Current limit 1 / 2	Setting range 0 ... **150** [% I_{Rated}] The internal current limitation refers to the apparent current, i.e. the output current of the inverter. The inverter automatically decreases the current limit internally in the field weakening range. In this way, the inverter implements a stall protection for the motor. A current limit lower than the rated motor current is ignored when the hoist function is activated.

No.	FBG	Name	Description
32_ / 33_		**Motor adjustment 1 / 2**	
Use function *P320/P330 Automatic adjustment* for single-motor operation only. You can use this function for all motors and control modes. The inverter measures the motor during pre-magnetization and sets the parameters *P322/P332 IxR adjustment* and *P321/P331 Boost*. The inverter thereby determines a basic setting that is suitable for many applications. The values are saved in volatile memory. The motor is not calibrated if: • P320/P330 Automatic adjustment = OFF. • VFC & Flying start operating mode is active. • The set pre-magnetization time is more than 30 ms shorter than the pre-magnetization time calculated during startup. If you deactivate automatic adjustment, the values measured last will be not be saved in volatile memory. The factory setting of parameters 321 ... 324 / 331 ... 334 depends on the motor.			
320 / 330		Automatic adjustment 1 / 2	off / OFF No automatic adjustment: The inverter does not calibrate the motor. **on / ON** Automatic adjustment: The inverter measures the motor when changing to the ENABLE operating mode.
321 / 331		Boost 1 / 2	Setting range **0** ... 100 [%] Manual setting is usually not required. In exceptional cases, manual setting may be necessary to increase the breakaway torque. In this case set to **max. 10 %**.
322 / 332		IxR Compensation 1 / 2	Setting range 0 ... 100 [%] The inverter sets the value automatically when *P320 / P330 Automatic adjustment* = *ON*. Manual alterations to individual controller parameters are reserved for optimization by specialists.
323 / 333		Pre-magnetization time 1 / 2	Setting range 0 ... 2 [s] Pre-magnetization builds a magnetic field in the motor when you enable the inverter.
324 / 334		Slip compensation 1 / 2	Setting range 0 ... 500 [rpm] Slip compensation increases the speed accuracy of the motor. Enter the rated slip of the connected motor as a manual entry. Do not enter a value more than 20 % different from the rated slip to compensate for fluctuations between various motors. The slip compensation is designed for a ratio smaller than 10 of load moment of inertia to motor moment of inertia. If the ratio is larger and the drive vibrates, then slip compensation must be reduced and even be set to 0 if necessary.
325		No-load damping	on / ON **off / OFF** No-load damping is used when the motor tends to be instable under no load conditions.
34_		**I_{Rated}-UL monitoring**	
345 / 346		I_{Rated}-UL monitoring 1 / 2	Setting range 0.1 ... 500 A The function cannot be deactivated. The factory setting depends on the rated power of the MOVITRAC® B and will be added to the rated current of the SEW motor with the same rating. At 150 % rated motor current, the inverter switches off after 5 minutes. At 500 % rated motor current, the inverter switches off after 20 seconds.

No.	FBG	Name	Description
4__		**Reference messages**	
The following reference values are used for recording and reporting certain operating states. All messages of parameter group 4__ can be output via binary outputs. The messages are valid if the inverter has reported *Ready* after switch-on and there is no fault display.			
40_		**Speed reference message**	
			The inverter issues the message "1" at P403 if the speed is less than or greater than the set reference speed. 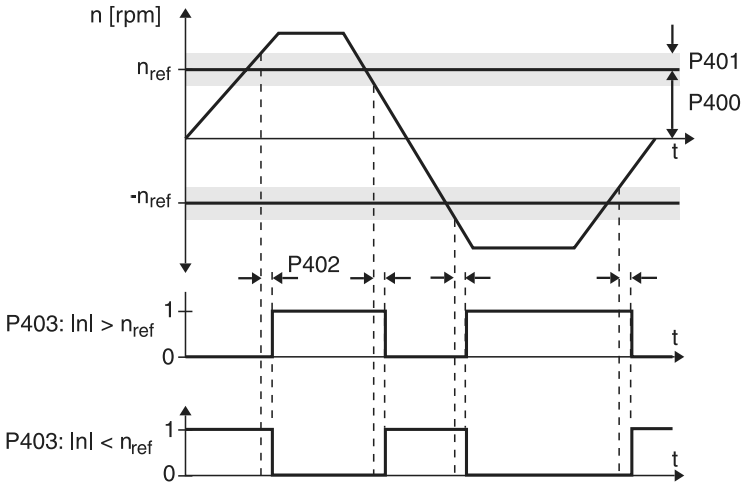 *Speed reference message*
400		Speed reference value	Setting range 0 ... **750** ... 5000 [rpm]
401		Hysteresis	Setting range 0 ... **100** ... 500 [rpm]
402		Delay time	Setting range 0 ... **1** ... 9 [s]
403		Message = "1" if:	**0 / n < n_{ref}** 1 / n > n_{ref}
45_		**PI controller reference message** (see sec. "Project Planning/PI Controller/Reference Message")	
These parameters determine whether and how the PI reference message responds			
450		PI actual value reference	**0.0** ... 100.0 [%]
451		Signal = "1" if:	0 / PI Actual value < PI Ref **1 / PI Actual value > PI Ref**
5__		**Monitoring functions**	
50_		**Speed monitoring 1 / 2**	
The drive reaches the speed specified by the setpoint only with adequate torque. If the inverter reaches *P303 Current limit*, this is because it is assumed that it will not attain the required speed. Speed monitoring is triggered if the inverter exceeds the current limit for longer than set in *P501 Delay time*.			
500 / 502	1 2	Speed monitoring 1 / 2	**off / OFF** on / Motor / regenerative Function of speed monitoring in motor and regenerative operation of the motor
501 / 503	1 2	Delay time 1 / 2	Setting range 0 ... **1** ... 10 [s] The set current limit can be reached briefly during acceleration, deceleration, or load peaks. You prevent the speed monitoring from responding too sensitively by setting the delay time. Monitoring responds when the current limit for the duration of the delay time is reached.

No.	FBG	Name	Description
6__		**Terminal assignment**	
60_		**Binary inputs (DI01 fixed assignment with CW/STOP)**	

In effect with	**0 signal**	**1 signal**	**In effect with: No enable**
0: No function:	–	–	–
1: Enable / Stop:	Stop at *P136 Stop ramp*	Enable	No
2: CW / stop:	Stop at *P131 Ramp down*	Enable CW	No
3: CCW / stop:	Stop at *P131 Ramp down*	Enable CCW	No
4: n11 / n21			No
5: n12 / n22			No
6: Fixed setpoint switchover:	Fixed setpoints n11/n12/n13	Fixed setpoints n21/n22/n23	Yes
7: Parameter set switchover:	Parameter set 1	Parameter set 2	Yes
8: Ramp switchover:	t11/t21 active	t12/t22 active	Yes
9: Motor potentiometer up:	–	Increase setpoint	No
10: Motor potentiometer down:	–	Decrease setpoint	No
11: /External fault:	External error	–	No
12: Fault reset:	Reset on positive edge 0 to 1		Yes
20: Setpoint acceptance active:	Do not accept	Accept setpoint	No
26: TF signal (DI05 only):	Overtemperature in motor	No signal	No
30: /Controller inhibit:	Inhibited	Enable	Yes

Fixed setpoints

n11/n21 = 0 and n12/n22 = 0:	External setpoints only
n11/n21 = 1 and n12/n22 = 0:	n11/n21
n11/n21 = 0 and n12/n22 = 1:	n12/n22
n11/n21 = 1 and n12/n22 = 1:	n13/n23

601	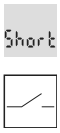	Binary input DI02	Factory setting: CCW / STOP
602		Binary input DI03	Factory setting: Enable
603	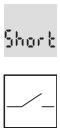	Binary input DI04	Factory setting: n11 / n21
604		Binary input DI05	Factory setting: n12 / n22
608		Binary input DI00	Factory setting: Error reset
62_		**Binary Outputs** (only use binary output DO02 for controlling the brake rectifier)	

In effect with	**0 signal**	**1 signal**
0: No function:	–	–
1: /Fault:	Collective fault signal	–
2: Ready for operation:	Not ready for operation	Ready for operation
3: Output stage on:	Unit inhibited	Unit enabled and motor energized
4: Rotating field on:	No rotating field	Rotating field
5: Brake released:	Brake applied	Brake released (Not with DO03)
8: Parameter set:	1 active	2 active
9: Speed reference message:	$n > n_{ref}$ / $n < n_{ref}$ (P403)	$n < n_{ref}$ / $n > n_{ref}$ (P403)
11: Comparison message setpoint-actual value:	$n \neq n_{set}$	$n = n_{set}$
21: IPOS output:	–	Depends on IPOS program
22: /IPOS fault:	IPOS error message	–
23: PI ACTUAL VALUE REF.:	–	PI controller actual value has exceeded the set threshold
24: Ex-e current limit active (in preparation)		

No.	FBG	Name	Description
620	Short	Binary output DO01	Default setting: /FAULT
621	Short	Binary output DO02	Default setting: BRAKE RELEASED
622	Short	Binary output DO03	Factory setting: READY (selection 5 (BRAKE RELEASED) not possible)
64_		**Analog outputs AO1** (optional)	
		Analog output AO1 is only available with the optional analog module FIO11B 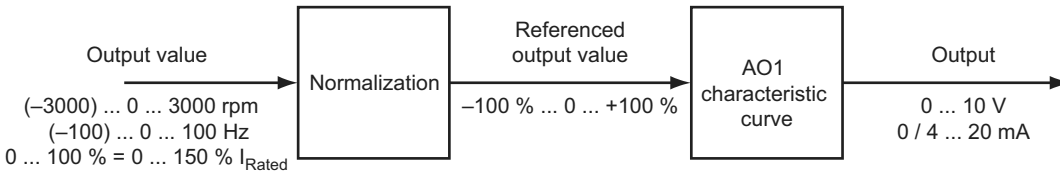 	
640	Lonb	AO1 analog output	**0 / No function** The value 0 % evaluated by the characteristic curve is displayed. 1 / Ramp generator input (amount) / 100 % corresponds to 3000 rpm Setpoint speed at the input of the internal ramp generator 2 / Setpoint speed (amount)/100 % corresponds to 3000 rpm Valid setpoint speed (output ramp generator or correcting variable of the higher-level controller) 3 / Actual speed (amount)/100 % corresponds to 3000 rpm 4 / Actual frequency (amount)/100 % corresponds to 100 Hz Rotating field frequency 5 / Output current (amount)/100 % corresponds to 150 % I_{Rated} Apparent current 6 / Active current (amount)/100 % corresponds to 150 % I_{Rated} 7 / Unit utilization/100 % corresponds to 150 % unit utilization Current unit utilization 11 / Actual speed (signed)/±100 % corresponds to ±3000 rpm 12 / Actual frequency (signed)/±100 % corresponds to ±100 Hz Rotating field frequency
641	Lonb	AO1 reference (as of firmware .13)	**0 / 3000 rpm, 100 Hz, 150 %** 1 / n_{max} 2 / $n_{set\ ref.}$
642	Lonb	Operating mode AO1	**0 / No function** Output: Always 0 V or 0 mA 2 / 0 ... 20 mA/100 % corresponds to 20 mA 3 / 4 ... 20 mA/100 % corresponds to 20 mA 4 / 0 ... 10 V/100 % corresponds to 10 V
646	Lonb	AO1 Characteristic curve x1	–100 % ... **0** ... +100 % (–3000 rpm) ... 0 ... +3000 rpm (–100 Hz) ... 0 ... 100 Hz 0 ... 100 % I_{Rated} 0 ... 100 % = 0 ... 150 % unit utilization
647	Lonb	AO1 Characteristic curve y1	**0** ... 100 %

No.	FBG	Name	Description
648		AO1 Characteristic curve x2	–100 % ... 0 ... **+100 %** (–3000 rpm) ... 0 ... +3000 rpm (–100 Hz) ... 0 ... 100 Hz 0 ... 100 % I_{Rated} 0 ... 100 % = 0 ... 150 % unit utilization
649		AO1 Characteristic curve y2	0 ... **100 %**
		The characteristic curve is described by the coordinates x1/y1 and x2/y2, with which the analog output is evaluated.	

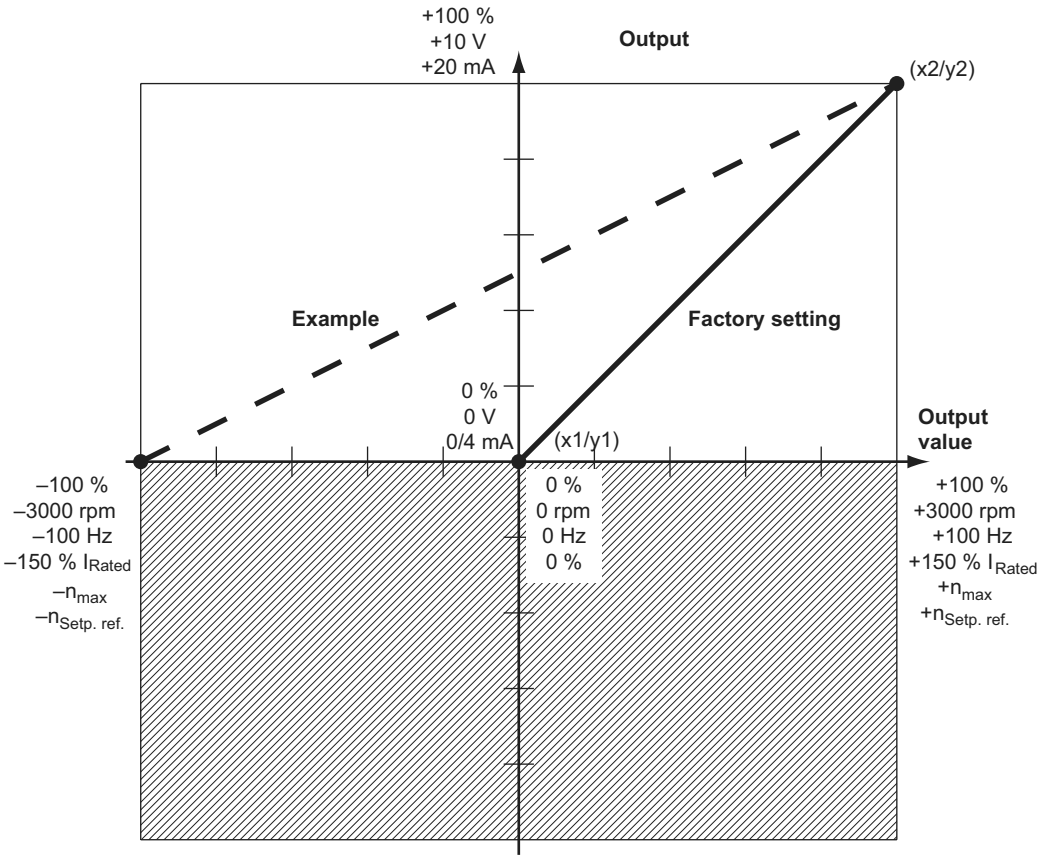

7__		Control functions
All settings with regard to the fundamental control properties of the inverter are defined within parameter group 7. The parameter group comprises functions which the inverter automatically executes when activated.		
70_		**Operating mode 1 / 2**
This parameter is used to set the basic operating mode of the inverter. Setting at the keypad.		
VFC / V/f characteristic curve: Default setting for asynchronous motors. Suitable for general applications, such as conveyor belts, trolleys, and hoists with counterweight.		
VFC & Hoist: The hoist function automatically provides all functions necessary for operating an unbalanced hoist. For safety reasons, make sure to monitoring functions that can prevent the drive from starting in particular. Monitoring functions: • Monitoring the output current during the pre-magnetization phase • Avoiding sag when the brake is released The unit detects the following incorrect configurations and displays them with the following faults: • 2 or 3-phase motor phase interruption: F82 = Output open • Pre-magnetization time too short or incorrect motor/inverter combination: F81 = Fault start condition • Motor phase failure due to active speed monitoring P500/501: F08 = Fault n-monitoring **Caution:** • The control must be designed so that the **direction of rotation** of the drive **can only be changed** when it is at a **standstill**. • A single-phase motor phase failure cannot always be detected reliably. • SEW-EURODRIVE strongly recommends activating speed monitoring. • Prerequisites for correct performance of the hoist function: Motor brake controlled by the inverter.		

No.	FBG	Name	Description

VFC & DC braking / V/f characteristic curve & DC braking: DC braking means the asynchronous motor brakes by using current injection. The motor brakes without braking resistor on the inverter. The following figure shows the braking torque profile when the braking current is the same as the rated motor current.

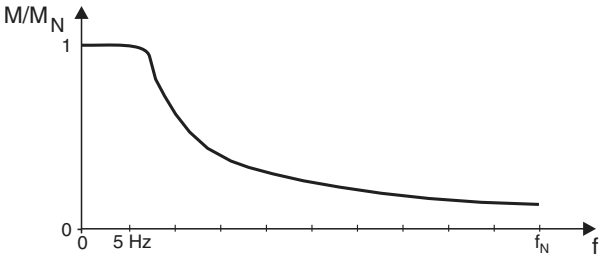

During braking, the inverter injects a constant current with a rotating field frequency of 5 Hz. The braking torque = 0 at standstill. A greater braking torque acts at a slower speed; the braking torque drops as the speed increases. The braking time and consequently the duration of the braking current depends on the load connected to the motor. DC braking stops at a rotating field frequency of 5 Hz. The motor stops along the stop ramp. Rated motor current is used for the current injection. In all cases, the inverter limits the current to max. 125 % $I_{Rated.}$ See "Brake function" for information about the brake control system.

Caution:
It is not possible to enable a directed stop or to observe a certain ramp using DC braking. The main purpose of DC braking is to drastically reduce the time the motors need for coasting to a halt.
The following diagram shows the braking profile.

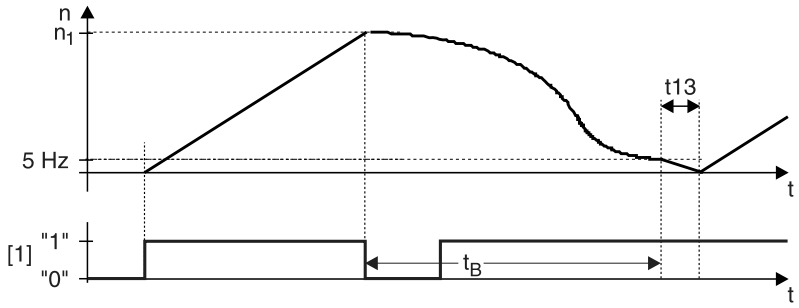

n_1 = Setpoint speed
[1] = Enable
t13 = Stop ramp
t_B = Braking phase

VFC & Flying start function: The flying start function lets you synchronize the inverter to an already running motor. This is used in particular with drives that are not braked actively, run on for a long time or are turned by a flowing medium, e.g. pumps and fans.
The maximum flying start time is approx. 200 ms.
P320 Automatic adjustment is deactivated in the FLYING START operating mode. It is important that the IxR value P322 (stator resistance) is set correctly to ensure that the flying start function is performed properly.
Startup of an SEW motor: The IxR value is set for an SEW motor at operating temperature. This value has to be reduced if flying start takes place with a cold motor.
The IxR value is measured at startup when a non-SEW motor is started up with MOVITOOLS.

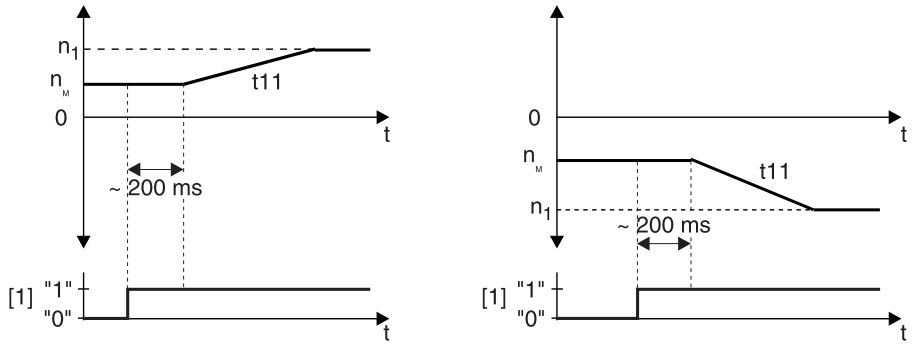

n_1 = Setpoint speed
n_M = Motor speed
[1] = Enable

The flying start function does not function if an output filter is connected to the inverter.
Caution:
Do not use the flying start function in hoist applications.

700 / 701	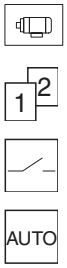	Operating mode 1 / 2	0 / VFC (field-oriented voltage flux control mode) 2 / VFC & Hoist (field-oriented control mode for hoist applications, can only be set in MOVITOOLS®) 3 / VFC & DC braking (field-oriented controlled mode with DC braking) 4 / VFC & flying start function (field-oriented control mode with flying start function) **21 / V/f Charactercurve** (voltage/frequency controlled mode) 22 / V/f & DC braking (voltage/frequency controlled mode with DC braking)

No.	FBG	Name	Description
71_		**Standstill current 1 / 2**	
With activated standstill current function, the inverter injects a current in the motor at standstill. This allows the inverter to fulfill the following functions: • When the ambient temperature of the motor is low, the standstill current prevents the risk of condensation and freezing (in particular of the disc brake). Set the amount of current in such a way that the motor does not overheat. **Recommendation:** Motor housing should be warm to the touch. • With activated standstill current, you can start the motor without pre-magnetization. **Recommendation:** For hoists, set to 45 ... 50 %. You can deactivate the standstill current function by P710 = 0. Set the standstill current in % of the rated motor current. The standstill current cannot exceed the current limit (P303). You can switch off the standstill current with /CONTROLLER INHIBIT = 0. When the standstill current function is activated, the output stage remains enabled even in the "No enable" status to inject the motor standstill current. The standstill current is not switched off by pressing the stop/reset key. You have to set the function of an input terminal to controller inhibit to activate the standstill current function. Otherwise the output stage will be energized directly.			
710 / 711	LonB 1 2	Standstill current 1 / 2	**0** ... 50 % I_{Mot}
72_		**Setpoint stop function 1 / 2**	
Use the *P720/P723 Setpoint stop* function to enable the inverter automatically depending on the main setpoint. The inverter is enabled with all the necessary functions, such as pre-magnetization and brake control. It is important that you also enable the drive via terminals.			
720 / 723	LonB 1 2	Setpoint stop function 1 / 2	**off / OFF** on / ON
721 / 724	LonB 1 2	Stop setpoint 1 / 2	0 ... **30** ... 500 [rpm]
722 / 725	LonB 1 2	Start offset 1 / 2	0 ... **30** ... 500 [rpm]
73_		**Brake function 1 / 2** MOVITRAC® B inverters are capable of controlling a brake installed on the motor. The brake function acts on the binary output which has the assignment of the "/BRAKE" function (24 V = brake released). Use DO02 for the brake control system. **The brake is always applied when /CONTROL.INHIBIT = 0.** 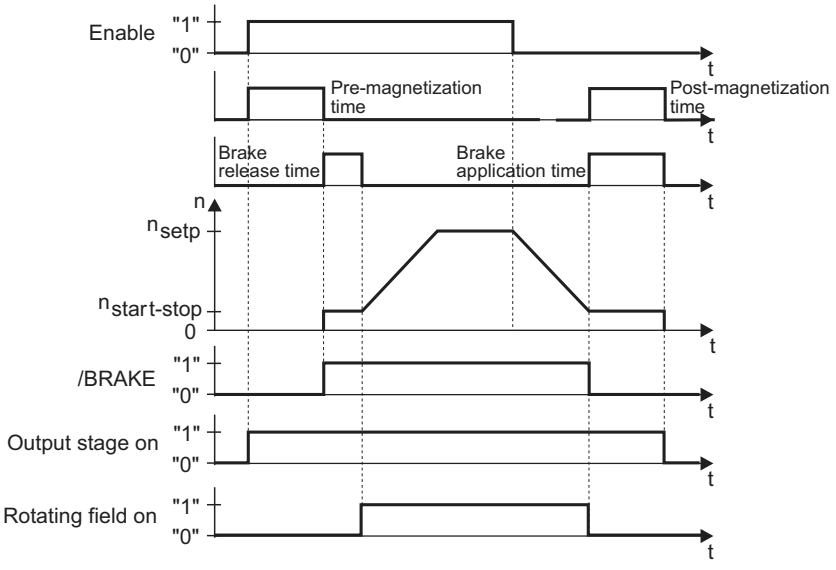	

No.	FBG	Name	Description
731 / 734	Lan6 1 2	Brake release time 1 / 2	Setting range **0** ... 2 [s] This parameter determines how long the motor will remain at a standstill after expiration of the pre-magnetization time and how much time the brake has to release.
732 / 735	Lan6 1 2	Brake application time 1 / 2	Setting range 0 ... 2 [s] You can use this parameter to set the time required for the mechanical brake to apply. This parameter prevents a sagging of the drive especially in hoists.
74_		**Speed skip function** The skip window center and skip width are values and automatically have an effect on positive and negative setpoints when activated. The function is deactivated by setting skip width = 0. 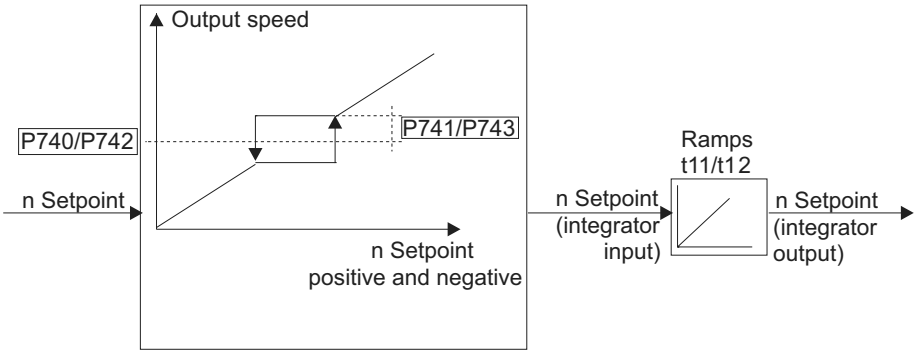 The "Speed skip" function makes it possible to prevent the motor speed from remaining within a certain speed window. This suppresses vibration and noise, in particular in machines with pronounced mechanical resonance.	
740 / 742	Lan6 1 2	Skip window center 1 / 2	Setting range 0 ... **1500** ... 5000 rpm
741 / 743	Lan6 1 2	Skip width 1 / 2	Setting range **0** ... 300 rpm
76_		**Manual operation**	
760	Lan6	Locking RUN/STOP keys (see Startup / External setpoint selection)	**off / OFF** (RUN/STOP keys are activated and can be used for starting and stopping the motor) on / ON (RUN/STOP keys are locked and therefore do not function)
77_		Energy-saving function	
770	Lan6	Energy-saving function	**off / OFF** on / ON
8__		**Unit functions**	
80_		**Setup**	
800	Short	Short menu (FBG11B only)	Long **Short** Use P800 to switch from the factory setting short menu to the detailed parameter menu.
You can use P802 to reset the factory setting stored in the EPROM for almost all parameters. You can also reset the unit to its initial delivery condition. Selecting DELIVERY STATE also resets the parameters listed above. The statistical data must be reset separately using *P804 Reset statistic data*. Setting the parameter to YES will restore the factory setting. SEt appears on the display while the factory setting is being restored. The previous operating status of the inverter appears on the display after the factory setting has been restored. P802 automatically reverts to NO. Activating the factory setting causes almost all parameter values to be overwritten. Store the set values using MOVITOOLS® before you activate the factory setting. Once the factory setting function has been used, you must adapt the parameter values and terminal assignments in accordance with the requirements.			

No.	FBG	Name	Description
802		Factory setting	**No** (do not restore factory setting) Std (restore factory setting) All (delivery status) for starting up IEC motors nEMA / delivery status for starting up NEMA motors
Setting *P803 Parameter lock = ON* enables you to prevent any changes to parameters. This does not apply to P841 Manual reset and P803 itself. The parameter lock makes sense, for example, after the MOVITRAC® B settings have been optimized. You can enable parameter changes again by setting *P803 Parameter lock = OFF*. The parameter lock also affects parameter changes via the RS-485 and SBus interfaces.			
803		Parameter lock	**off / OFF** (all parameters can be changed) on / ON (you can change P803 and P840 only)
P804 Reset statistic data permits the statistical data stored in the EEPROM (fault memory) to be reset. These data are not affected when restoring the factory settings. The parameter automatically reverts to NO after the reset.			
804		Reset statistics data	**No action** (no reset is performed) Error memory (the content of the error memory is reset)
806		Copy DBG → MOVITRAC® B	Yes / **No** The parameter data in the DBG60B is transferred to the MOVITRAC® B.
807		Copy MOVITRAC® B → DBG	Yes / **No** The parameter data in the MOVITRAC® B is transferred to DBG60B.
81_		**Serial communication**	
810		RS-485 address	Setting range **0** ... 99 P810 sets the address of the MOVITRAC® B for communication via the serial interface. MOVITRAC® B units are always set to the address 0 on delivery. To avoid problems during data exchange in serial communication with several inverters, SEW-EURODRIVE recommends that you do not use address 0.
811		RS-485 group address	Setting range **100** ... 199
812		RS-485 timeout delay	Setting range **0** ... 650 [s]
82_		**Brake operation 1 / 2**	
P820/P821 switches 4-quadrant operation on and off. 4-quadrant operation is possible if a braking resistor is connected to the MOVITRAC® B. P820/P821 must be set to OFF if there is no braking resistor connected to MOVITRAC® B, which means regenerative operation is not possible. In this operating mode, the MOVITRAC® B unit attempts to extend the deceleration ramp. As a result, the generated power is not too great and the DC link voltage remains below the switch-off threshold. If the regenerative power is too great despite the extended deceleration ramps, then MOVITRAC® B may switch off with the *F07 DC link overvoltage* fault. In this case, you have to extend the deceleration ramps manually (P131). Therefore, do not set unrealistic short deceleration ramps. The unit reacts with fault message *F34 Ramp timeout* if the ramp is set too short and the ramp which can actually be achieved is significantly longer than the set value.			
820 / 821	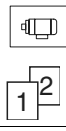	4-quadrant operation 1 / 2	off/OFF **on/ON**
83_		**Fault responses**	
The EXT. FAULT fault can only be triggered when the inverter status is ENABLED. P830 programs the error response that is triggered by input terminal programmed to /EXT. ERROR.			
830		Response terminal "external fault"	2 / Immediate stop / Fault The inverter performs an emergency stop with an error message. The inverter inhibits the output stage and the brake is applied. The inverter revokes the ready signal and sets the programmed error output. A restart is only possible after an error reset has been performed during which the inverter is reinitialized. **4 / Rapid stop / Malfunction** (Factory setting for P830) The inverter brakes the drive using the specified stop ramp (P136 / P146). The inverter uses DC braking in 2-quadrant mode. Once the stop speed is reached, the inverter inhibits the output stage and the brake is applied. The error is signaled immediately. The inverter revokes the ready signal and sets the programmed error output. A restart is only possible after an error reset has been performed during which the inverter is reinitialized. 7 / **Rapid stop** / **Warning** (Factory setting for 833 / 836) The error response corresponds to STOP/FAULT, except the inverter does not revoke the ready signal and the error output is set.
833		Response timeout RS-485	
836		Response timeout SBus	

No.	FBG	Name	Description
84_		**Reset behavior**	
840		Manual reset Parameter P840 corresponds to the STOP/RESET key.	Yes MOVITRAC® B resets the existing fault. P840 automatically reverts to NO after the reset. The motor immediately restarts to the specified setpoint if all required messages are issued after the reset has been performed. Activating the manual reset does not have any effect if there is no error present. **No** No reset.
86_		**Modulation 1 / 2**	
P860/P861 sets the nominal cycle frequency at the inverter output. If P862/P863 is OFF then the cycle frequency can vary independently depending on the unit utilization.			
860 / 861		PWM frequency 1 / 2	**4 kHz** 8 kHz 12 kHz 16 kHz
862 / 863	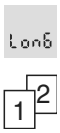	PWM fix 1 / 2	on/ON (no independent variation of the cycle frequency by the inverter) **off/OFF** (autonomous variation of the cycle frequency by the inverter depending on the utilization)
87_		**Process data parameter settings** (refer to the MOVITRAC® B Communication manual for more information)	
Use P870 ... P872 can be used to determine the content of the process output data word PO1 ... PO3. This definition is necessary so that MOVITRAC® B can allocate the appropriate setpoints. The following process output assignments are available: 0 / No function: The content of the process output data word is ignored. 1 / Setpoint speed: Speed setpoint entry in rpm. 5 / Max. speed: Maximum speed (P302). 8 / Ramp: Ramp time for setpoint selection (P130 / P131). 9 / Control word 1: Control signals for start/stop, etc. 10 / Control word 2: Control signals for start/stop, etc. 11 / Setpoint speed [%]: Selection of a speed setpoint in % of P302. 12 / IPOS PO data: Specification of a 16-bit-coded value for IPOS$^{plus®}$ 13 / PI controller setpoint [%]: PI controller setpoint			
870		Setpoint description PO1	Factory setting: Control word 1
871		Setpoint description PO2	Factory setting: Speed
872		Setpoint description PO3	Factory setting: No function
Use P873 ... P875 can be used to determine the content of the process input data words PI1 ... PI3. This definition is necessary so that MOVITRAC® B can allocate the appropriate actual values. The following PI assignments are available: 0 / No function: The content of the process input data word is 0000_{hex} 1 / Actual speed: Momentary actual speed value in rpm. 2 / Output current: Momentary active current of the inverter in % of I_{Rated} 3 / Active current: Momentary output current of the inverter in % of I_{Rated} 6 / Status word 1: Status information of the inverter. 8 / Actual speed [%]: Current actual speed value in % of P302. 9 / IPOS-PI data: IPOS Process input data. 10 / PI controller actual value [%]: Actual values of the PI controller.			
873		Actual value description PI1	Default setting: STATUS WORD 1
874		Actual value description PI2	Default setting: SPEED
875		Actual value description PI3	Default setting: OUTPUT CURRENT
876		PO data enable	no / NO The last valid process output data remain in effect. **yes / YES** The process output data that was last sent from the fieldbus control become effective.

No.	FBG	Name	Description
88_		**Serial communication SBus**	
880	Lon6	SBus protocol	Setting range SBus **0 / MoviLink** 1 / CANopen
881	Short	SBus address	Setting range **0** ... 63 P881 sets the system bus address of the MOVITRAC® B. This address enables the MOVITRAC® B to communicate, for example, with the PC, PLC or MOVIDRIVE® via the system bus. MOVITRAC® B units are always set to the address 0 on delivery. To avoid problems during data exchange in serial communication with several inverters, SEW-EURODRIVE recommends that you do not use address 0.
882		SBus group address	Setting range **0** ... 63 P882 makes it possible to group together several MOVITRAC® B units for communication via the serial interface. All MOVITRAC® B units with the same SBus group address can thus be addressed using a multicast telegram via this address. The data received via the group address is not acknowledged by MOVITRAC® B. For example, the SBus group address makes it possible to send setpoint selections to a group of MOVITRAC® B inverters simultaneously. An inverter with group address 0 is not assigned to a group.
883	Lon6	SBus timeout delay	Setting range **0** ... 650 [s] P883 sets the monitoring time for data transmission via the system bus. MOVITRAC® B performs the fault response Stop/Fault if there is no data traffic via the system bus for the period set in P815. No monitoring of data transmission via the system bus takes place when P883 is set to 0.
884	Lon6	SBus baud rate	Use P816 to set the transmission speed of the system bus. 125 / 125 kBaud 250 / 250 kBaud **500 / 500 kBaud** 1000 / 1000 kBaud
886	Lon6	CANopen address	Setting range 1 ... **2** ... 127 P886 sets the address for serial communication with the SBus.

6 Project Planning

6.1 Schematic sequence

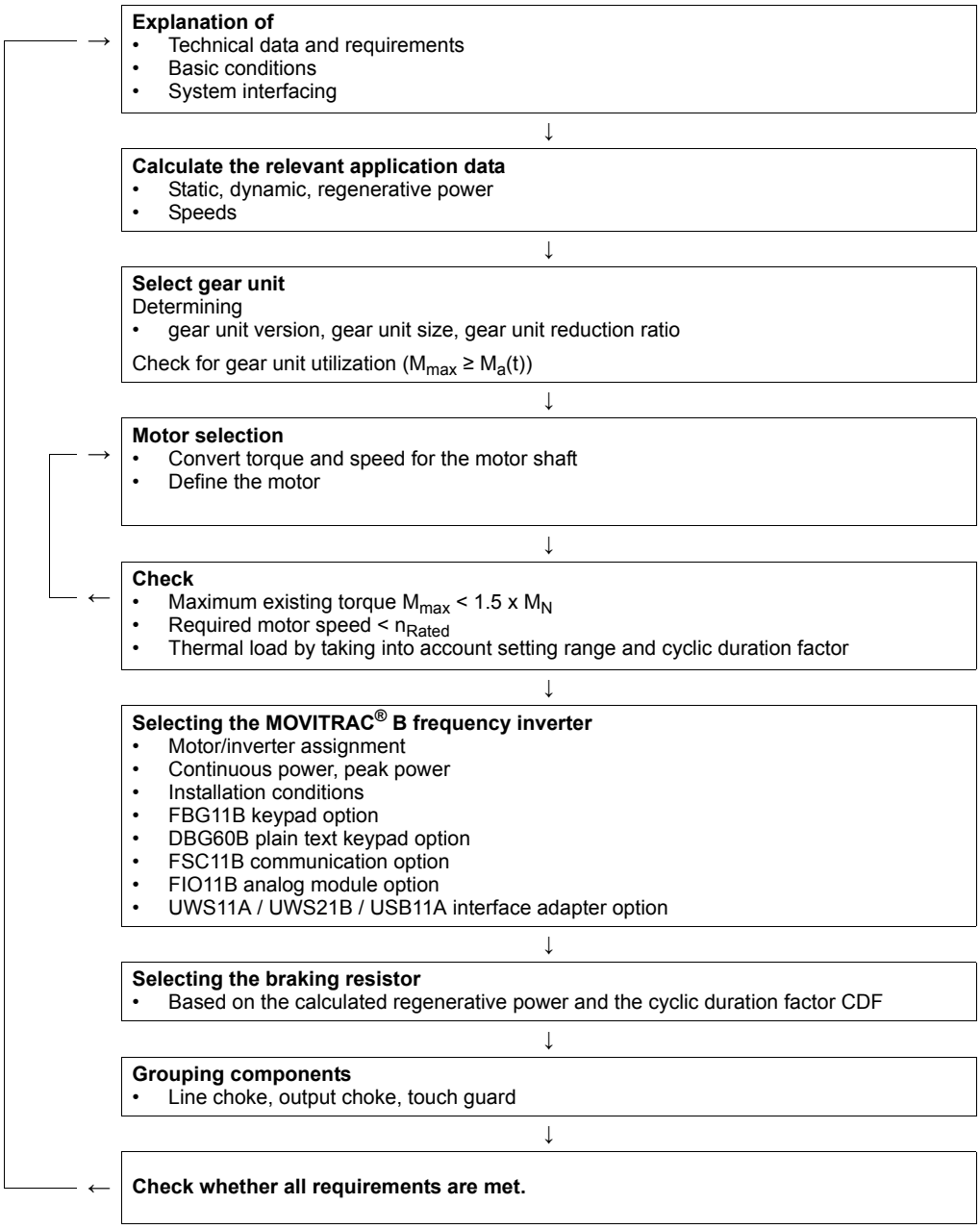

6.2 Options for standard applications

Refer to the following table for available options for simple applications. Conditions for simple applications:

- Vertical movement: Braking time is less than 25 % of cyclic duration factor CDF and no longer than 30 s.
- Horizontal movement: Braking time is less than 12 % of cyclic duration factor CDF and no longer than 15 s.

Type MC07B		Braking resistor		Output choke	Line filter
		Horizontal movement	Vertical movement		
230 V 1-phase	0003	BW027-003	BW027-003	HD012	Integrated[1)]
	0004	BW027-003	BW027-003	HD012	
	0005	BW027-003	BW027-003	HD012	
	0008	BW027-003	BW027-005	HD012	
	0011	BW027-003	BW027-005	HD012	
	0015	BW027-003	BW027-006	HD012	
	0022	BW027-005	BW027-012	HD012	
230 V 3-phase	0003	BW027-003	BW027-003	HD012	Integrated[1)]
	0004	BW027-003	BW027-003	HD012	
	0005	BW027-003	BW027-003	HD012	
	0008	BW027-003	BW027-006	HD012	
	0011	BW027-003	BW027-006	HD012	
	0015	BW027-003	BW027-006	HD012	
	0022	BW027-006	BW027-012	HD012	
	0037	BW027-006	BW027-012	HD012	
	0055	BW012-025	BW012-025	HD001	
	0075	BW012-015	BW012-025	HD001	
	0110	BW012-025	BW012-050	HD003	NF048-503
	0150	2 × BW012-025	2 × BW012-050	HD003	NF063-503
	0220	2 × BW106	2 × BW106	HD003	NF085-503
	0300	2 × BW106	2 × BW106	HD003	NF115-503
400 V 3-phase	0003	BW072-003	BW072-003	HD012	Integrated[1)]
	0004	BW072-003	BW072-003	HD012	
	0005	BW072-003	BW072-003	HD012	
	0008	BW072-003	BW072-005	HD012	
	0011	BW072-003	BW072-005	HD012	
	0015	BW072-003	BW168	HD012	
	0022	BW072-005	BW168	HD012	
	0030	BW072-005	BW268	HD012	
	0040	BW168	BW268	HD012	
	0055	BW147	BW247	HD001	
	0075	BW147	BW347	HD001	
	0110	BW039-026	BW039-050	HD001	
	0150	BW018-035	BW018-075	HD003	NF035-503
	0220	BW018-035	BW018-075	HD003	NF048-503
	0300	BW018-075	BW915	HD003	NF063-503
	0370	2 × BW012-025	BW106	HD003	NF085-503
	0450	BW106	BW206	HD003	NF085-503
	0550	BW106	BW206	HD003	NF115-503
	0750	BW106	3 × BW012-100	HD003	NF150-503

1) Additional components are required to reach limit value class B.

6.3 Description of applications

6.3.1 Project planning for trolleys

The motor load in the dynamic sections determines the peak motor power to be sized. The thermal load determines the required continuous power of the motor. Refer to the travel cycle for determining the thermal load. The speed profile is the significant factor in determining the self-cooling of the motor.

6.3.2 Project planning for hoists

In practice, you must take particular account of thermal and safety-relevant criteria when sizing hoists.

The control must be designed so that the direction of rotation of the drive can only be changed when it is at a standstill.

Thermal considerations

In contrast to trolleys, hoists require approx. 70 ... 90 % of rated torque of the motor.

Starting torque

The motor requires the highest operating torque in the event of acceleration with maximum load and an **upward** hoisting direction.

As a rule, design the 4-pole gearmotor for a maximum speed of

- 2100 rpm (70 Hz) at a transition speed of 1500 rpm (50 Hz)
- 2500 rpm (83 Hz) at a transition speed of 1800 rpm (60 Hz)

This that means the gear unit input speed is increased by a factor of approx. 1.4. This is why you have to select a 1.4 times higher gear unit reduction ratio. The motor will not lose any torque in the field weakening range (50 ... 70 Hz or 60 ... 83 Hz) at the input shaft. The higher gear unit ratio compensates for the inversely proportionate decrease in torque in relation to speed. Furthermore, the startup torque is 1.4 times greater. Further advantages are that the speed range is greater and the self-cooling of the motor more powerful.

Hoist voltage / speed characteristic curve

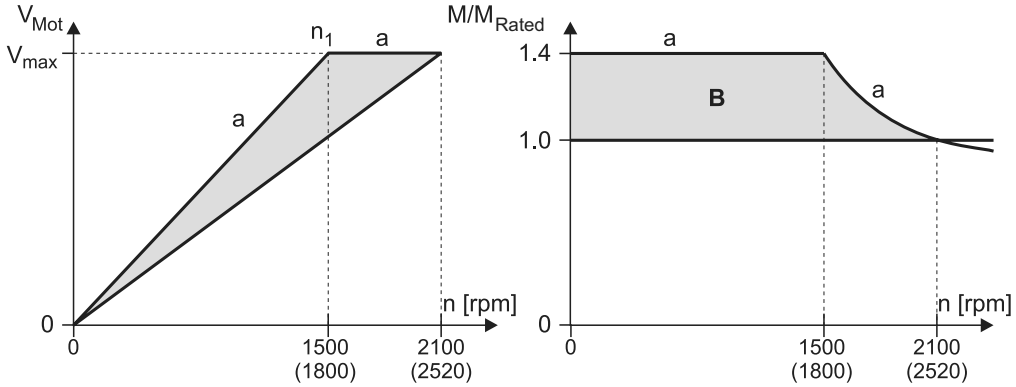

a = Recommended voltage / speed characteristic curve and resultant torque characteristic
B = Torque reserve range

Select the motor power for hoists according to the load type:

- S1 (100 % CDF): Select the motor power of the next higher motor type than the selected inverter power, e.g. for lengthy upwards travel or continuous elevators.
- S3 (40 % CDF): Select the motor power according to the selected inverter power.

Activate the hoisting function by selecting operating mode P700 = VFC & hoist regardless of the above guidelines.

6.4 Speed-torque characteristics

The speed-torque characteristic curve appears as follows:

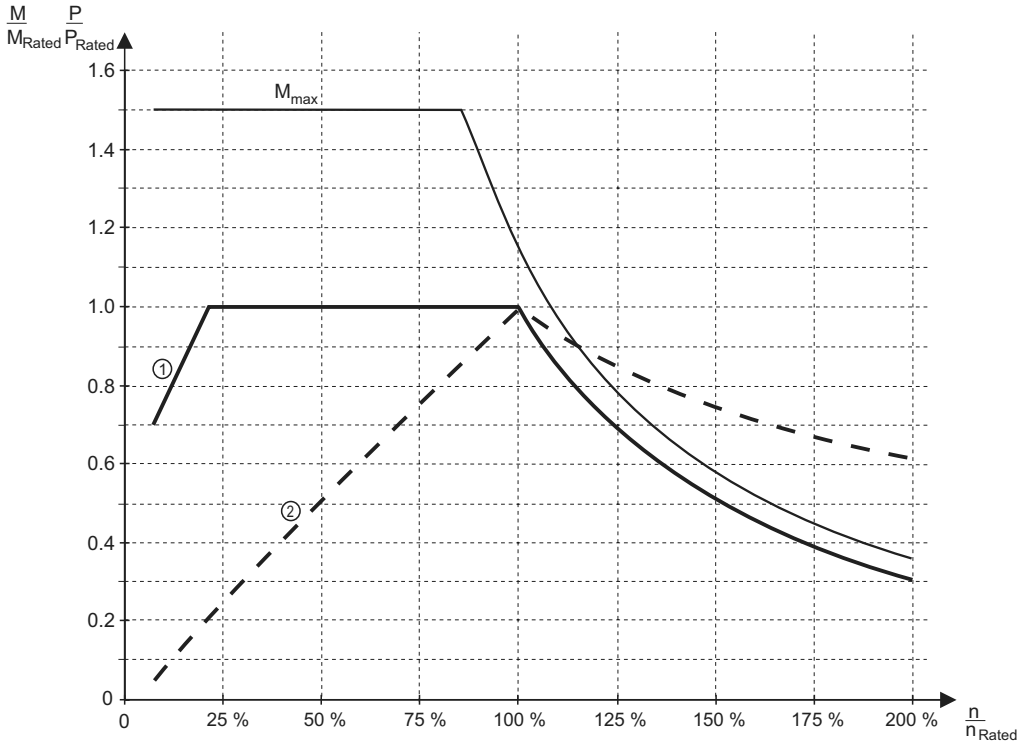

[1] M in S1 100 % cdf
[2] P in S1 100 % cdf

6.5 Motor selection

6.5.1 Basic recommendations

- Only use motors with at least thermal class F.
- Use the TF thermistor or TH bimetallic switch.
- Preferably use 4-pole motors. This applies particularly if you are operating gear-motors with a high oil filling level because of their vertical mounting position. 2-pole motors cause large churning losses.

6.5.2 Voltage-frequency characteristic curve

The asynchronous motor follows a load-dependent voltage/frequency characteristic in V/f operating modes. The motor model is continuously calculated in the VFC operating mode. At startup, set the characteristic curve with rated motor voltage and rated motor frequency. The setting determines the speed-dependent torque and power characteristics of the asynchronous motor.

The following figure shows an example of the voltage / frequency characteristic curves of an asynchronous AC motor 230 / 400 V, 50 Hz.

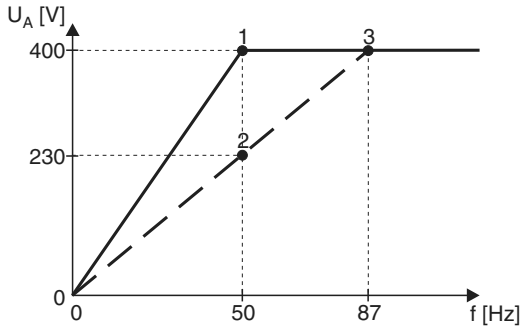

1 Star connection; 400 V, 50 Hz
2 Delta connection; 230 V, 50 Hz
3 Delta connection; 400 V, 87 Hz

The MOVITRAC® B output voltage is limited by the provided supply voltage.

6.5.3 Dynamic applications

For dynamic applications, you must have a drive with a rated inverter current greater than the rated motor current.

Set the following parameters so the motor can generate at most 150 % of the rated motor torque:

- *Current limit P303*
- *Slip compensation P324*

Increase these parameters manually by a factor of approx. 1.4 for dynamic applications.

6.5.4 Inverter/motor combinations

The following table shows possible inverter / motor combinations. You can also assign the next higher motor size to the inverters. The 4-pole motors (1500 rpm) are included in the factory settings of MOVITRAC® B. Smaller motors can deteriorate the control behavior.

MOVITRAC® B:	Rated power P_{Rated}	SEW motor	
Speed [rpm] at 50 Hz		3000	1500
Speed [rpm] at 60 Hz		3600	1800
MC07B0003-...-4-00	0.25 kW (0.34 HP)	DFR63M2	DFR63L4
MC07B0004-...-4-00	0.37 kW (0.50 HP)	DFR63L2	DT71D4
MC07B0005-...-4-00	0.55 kW (0.74 HP)	DT71D2	DT80K4
MC07B0008-...-4-00	0.75 kW (1.0 HP)	DT80K2	DT80N4
MC07B0011-...-4-00	1.1 kW (1.5 HP)	DT80N2	DT90S4
MC07B0015-...-4-00	1.5 kW (2.0 HP)	DT90S2	DT90L4
MC07B0022-...-4-00	2.2 kW (3.0 HP)	DT90L2	DV100M4
MC07B0030-...-4-00	3.0 kW (4.0 HP)	DV100M2	DV100L4
MC07B0040-...-4-00	4.0 kW (5.3 HP)	DV112M2	DV112M4
MC07B0055-...-4-00	5.5 kW (7.4 HP)	DV132S2	DV132S4
MC07B0075-...-4-00	7.5 kW (10 HP)	DV132M2	DV132M4
MC07B0110-...-4-00	11 kW (15 HP)	DV160M2	DV160M4
MC07B0150-...-4-00	15 kW (20 HP)	DV160L2	DV160L4
MC07B0220-...-4-00	22 kW (30 HP)	DV180L2	DV180L4
MC07B0300-...-4-00	30 kW (40 HP)	–	DV200L4
MC07B0370-...-4-00	37 kW (50 HP)	–	DV225S4
MC07B0450-...-4-00	45 kW (60 HP)	–	DV225M4
MC07B0550-...-4-00	55 kW (74 HP)	–	DV250M4
MC07B0750-...-4-00	75 kW (100 HP)	–	DV280S4

6.6 Overload capacity

MOVITRAC® B frequency inverters permanently calculate the load at the inverter output stage (unit utilization). They can output the maximum possible power in every operating status.

The permitted continuous output current depends on:

- Ambient temperature
- Heat sink temperature
- Mains voltage
- PWM frequency

If a PWM frequency > 4 kHz is set and "P862/P863 PWM fix 1/2" is set to off, the inverter automatically reduces the PWM frequency in the event of a unit overload. The inverter reacts to a higher than permitted load by issuing the "F44 Unit utilization" error message and an immediate switch-off.

Overload capacity at 40 °C (104 °F)

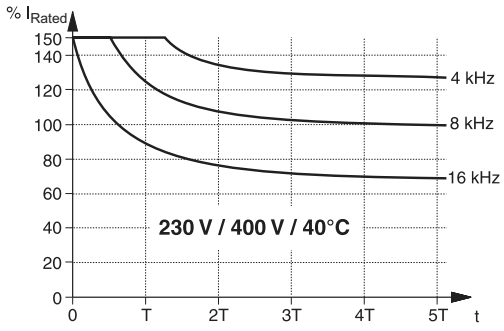

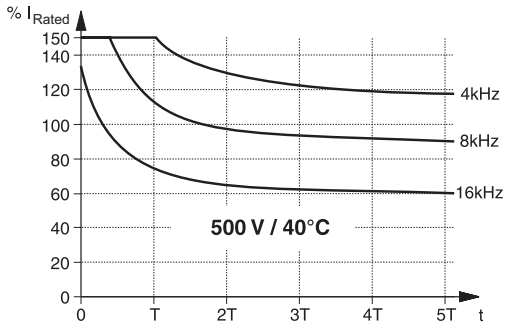

Overload capacity at 25 °C (77 °F)

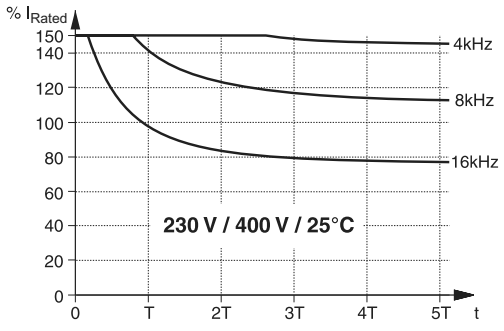

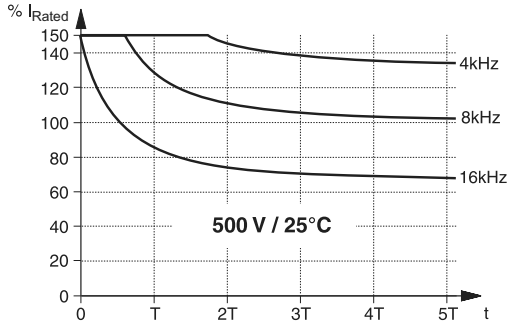

Size	0XS	0S < 1.5 kW (2.0 HP)	0S 1.5 kW (2.0 HP)	0L	1	2S	2	3	4
T (min)	20	20	8	8	3.5	4	5	4	9

6.7 Load capacity of the units at low output frequencies

The thermal model in MOVITRAC® B implements dynamic limiting of the maximum output current. Consequently, the thermal model only permits less than 100 % output current at output frequencies less than 2 Hz if the capacity utilization is high.

In such operating states, configure the average output current of the inverter to max. 70 % of the rated inverter current.

	NOTE
	The output frequency of the inverter is comprised of the rotational frequency (speed) and the slip frequency.

Guaranteed continuous currents depending on the output frequency:

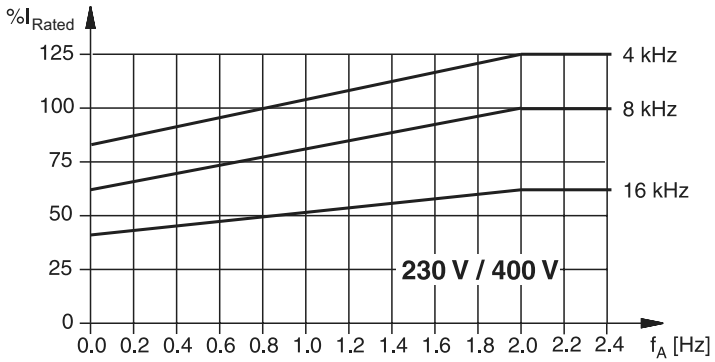

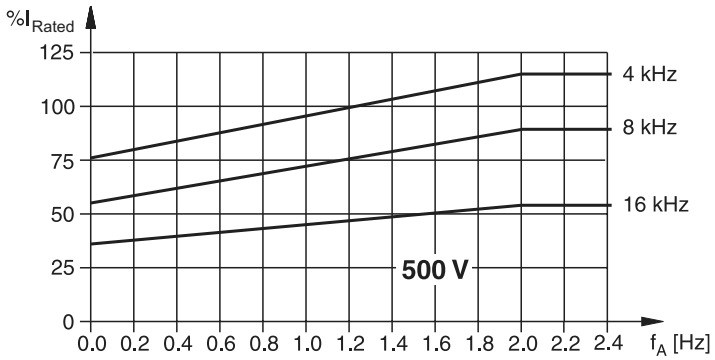

6.8 Selecting the braking resistor

HAZARD

The connection lines to the braking resistor carry a **high DC voltage (approx. DC 900 V)**

Severe or fatal injuries from electric shock.

- The braking resistor cables must be suitable for this high DC voltage.
- Install the braking resistor cables according to the regulations.

WARNING

The surfaces of the braking resistors get very hot when the braking resistors are loaded with $P_{N.}$

Risk of burns and fire.

- Choose a suitable installation location. Braking resistors are usually mounted on top of the control cabinet.
- Do not touch the braking resistors.

NOTES

- The data applies to BW..., BW...-T and BW...-P braking resistors.
- For BW..., BW...-T and BW...-P braking resistors, plan for a load derating of 4% per 10 K from an ambient temperature of 45 °C (113 °F) Do not exceed a maximum ambient temperature of 80 °C (176 °F).
- The overload factor of the BW..-T and BW...-P braking resistors is limited by using an integrated temperature relay:
  - BW...-T up to overload factor 12
  - BW...-P up to overload factor 40
- The **maximum permitted cable length** between **MOVITRAC®** and the braking resistor is **100 m** (**328 ft**).

- **Parallel connection**

  Two braking resistors must be connected in parallel for some inverter/resistor combinations. In this case, set the trip current on the bimetallic relay to twice the value of I_F provided in the table.

- **Peak braking power**

  The peak braking power can be lower than the load capacity of the braking resistor due to the DC link voltage and the resistance value. Formula for calculating the peak braking power:

  $P_{max} = V_{DC}^2/R$

  V_{DC} is the maximum permitted DC link voltage. Its value is:

  - With 400 / 500 V units: DC 970 V
  - With 230 V units: DC 485 V

  The following table lists the peak braking power levels that are possible for the different resistance values.

Resistance [Ω]	Peak breaking power [kW (HP)]	
	400 / 500 V units	230 V units
100	9.4 (13)	–
72	13.0 (17)	–
68	13.8 (18.5)	–
47	20.0 (26.8)	–
39	24.0 (32)	–
27	34.8 (46.7)	8.7 (12)
18	52.2 (70.0)	–
15	62.7 (84.1)	–
12	78.4 (105)	19.6 (26.3)
9 (2 × 18 Ω parallel)	–	26.1 (35.0)
6	156 (209)	39.2 (52.6)

6.8.1 Load capacity of PTC braking resistors

The following diagram shows the load capacity of the braking resistors BW2 and BW4 per braking operation:

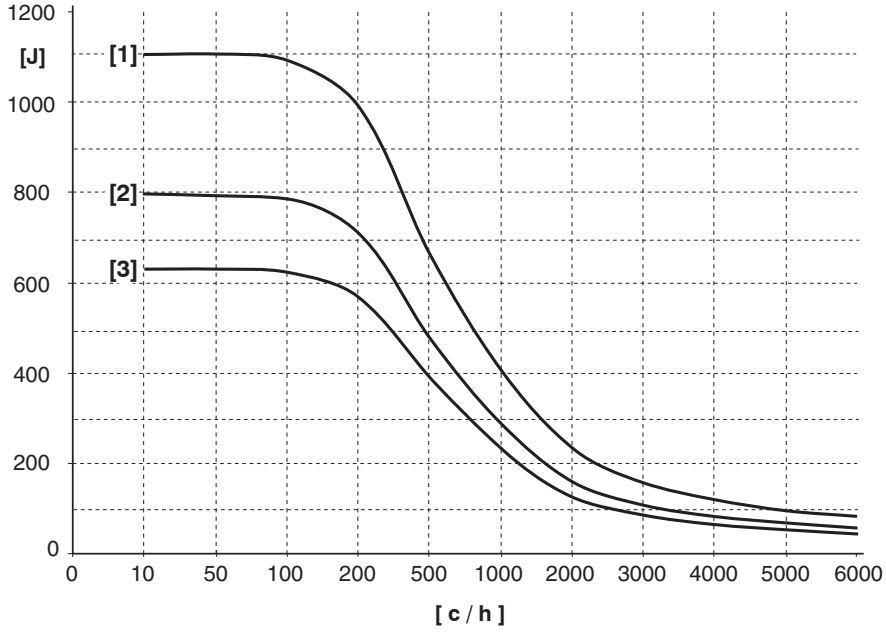

[1] Brake ramp 10 s
[2] Brake ramp 4 s
[3] Brake ramp 0.2 s
c/h Cycles/hour

Calculation example

Given:

- Average braking power: 0.25 kW (0.34 HP)
- Brake ramp: 2 s
- 200 brake applications per hour

Procedure:

Calculate energy and power of the brake ramp:

$W = P \times t = 0.25\ \text{kW} \times 2\ \text{s} = 500\ \text{J}$

The brake ramp [3] (0.2 s) in the diagram can be used for the brake ramp of 2 s. Use the characteristic curve with the shorter brake ramp because a shorter brake ramp means more power.

The diagram allows a power of 580 J with a 0.2 s brake ramp at 200 cycles per hour. In this case, the required 500 J can be dissipated with BW2 / BW4.

6.8.2 Load capacity flat design, wire resistors, grid resistors

In braking operations within the cycle duration T_D (standard: $T_D \leq 120$ s), the CDF braking power can be used to determine the resulting continuous resistance rating (100 % CDF power) with reference to the power diagrams. The right-hand y axis shows the 100 % CDF power. Observe the conditional peak braking power due to the DC link voltage when determining the load capacity.

Flat-design power diagram

Power diagram for flat-design braking resistors:

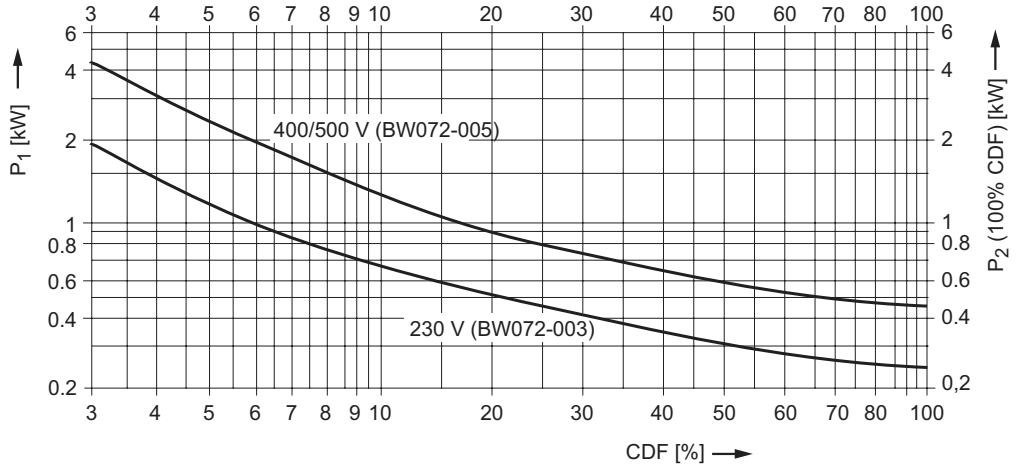

P_1 = Short-term power
P_2 = Continuous power
CDF= Cyclic duration factor of the braking resistor

Overload factor for wire resistors

Overload factor dependent on the cycle duration factor for wire resistors:

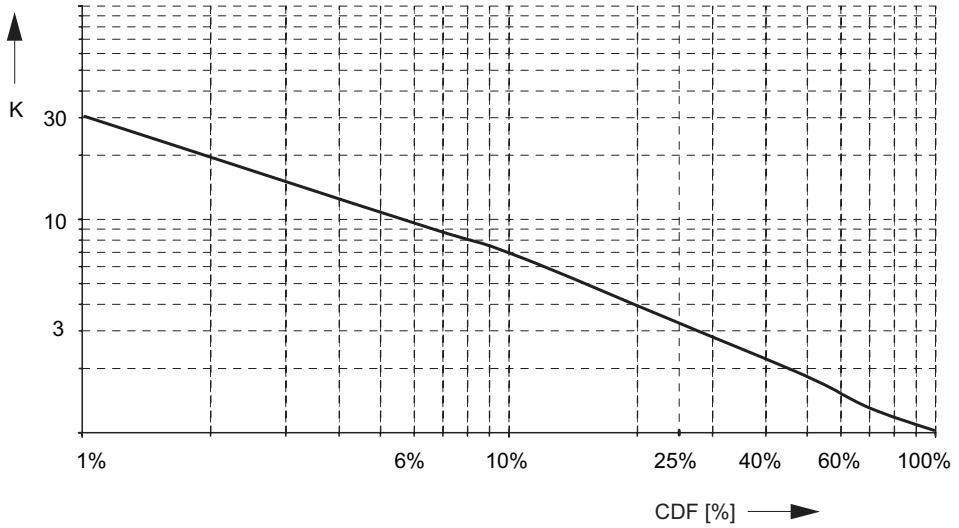

Cyclic duration factor CDF	1 %	3 %	6 %	15 %	25 %	40 %	60 %	80 %	100 %
Overload factor K	30	15	9.5	5	3.2	2.2	1.5	1.12	1

Overload factor for grid resistors

Overload factor depending on cycle duration factor for grid resistors:

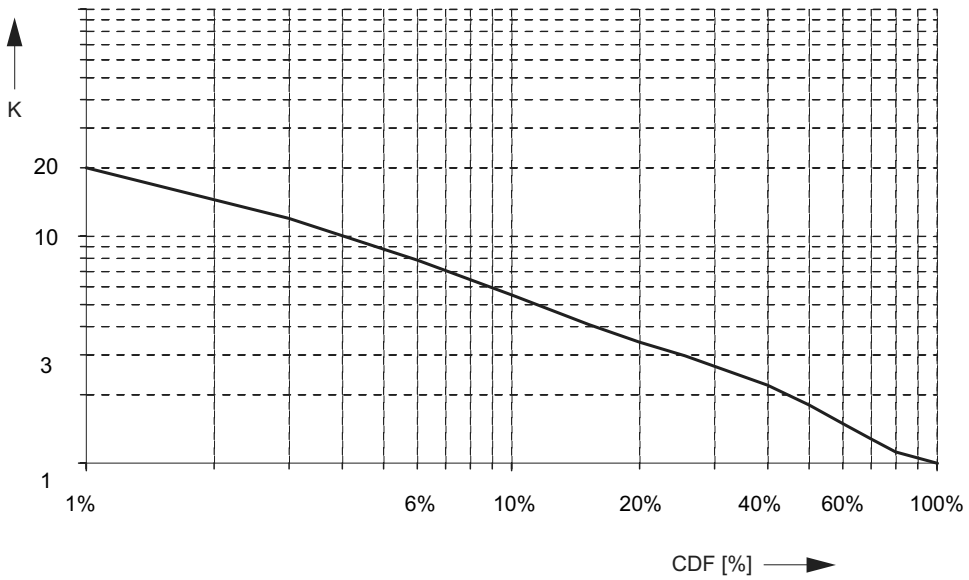

Cyclic duration factor CDF	1 %	3 %	6 %	15 %	25 %	40 %	60 %	80 %	100 %
Overload factor K	20	12	7.6	4	3	2.2	1.5	1.12	1

Calculation example

Given:

- Peak braking power 13 kW (17 HP)
- Average braking power 6.5 kW (8.7 HP)
- Cyclic duration factor CDF 6 %

Required:

- BW.. braking resistor

Procedure

- The 100 % CDF power for wire and grid resistors is initially calculated using the following formula:

  Average braking power / overload factor (wire / grid resistor)

  Refer to the diagrams for the overload factor (wire and grid resistor) with a cyclic duration factor (CDF) of 6 %.
- Results:

  100 % CDF power for wire resistors: 685 W (0.919 HP).

  100 % CDF power for grid resistors: 856 W (1.15 HP).
- The **maximum braking resistance value is 72 Ω** for a peak braking power of 13 kW (17 HP) when using an **MC07B...-5A3 (400 / 500 V AC unit)** (→ Peak braking power table).
- Select the appropriate braking resistor from the assignment tables with the following points:
  - Max. permitted braking resistance value
  - MOVITRAC® unit used

  Result when using MC07B0110-5A3, for example: BW039-12

6.9 Connecting AC brake motors

For detailed information about the SEW brake system, refer to the "Gearmotors" catalog, which you can order from SEW-EURODRIVE.

SEW brake systems are disc brakes with a DC coil that release electrically and brake using spring force. A brake rectifier provides the brake with DC voltage.

	NOTE
	The brake rectifier must have a separate supply system cable for inverter operation; it must not be powered using the motor voltage!

6.9.1 Disconnecting the brake rectifier

The brake rectifier can be switched off, causing the brake to be applied, in two ways:

1. Cut-off in the AC circuit
2. Cut-off in the DC and AC circuit (faster cut-off)

Always switch off the brake in the DC and AC circuits with:

- All hoist applications

6.9.2 Activating the brake

Always activate the brake via binary output DOØ2 "/Brake": do not use the PLC.

The binary output DOØ2 "/Brake" is configured as an output for operating a relay with free-wheeling diode and a control voltage of DC +24 V / max. 150 mA / 3.6 W (0.0048 HP). A power contactor can be controlled directly with a DC 24 V coil voltage or the BMK brake rectifier. This power contactor is used to switch the brake.

The startup function in the FBG11B keypad and in the MotionStudio software sets the brake parameters for the 2-pole and 4-pole motors from SEW-EURODRIVE. The brake parameters (P73_) must be set manually in the case of SEW-EURODRIVE motors with a higher number of poles and non-SEW motors.

6.9.3 Brake parameters

	NOTE
	The brake parameters are adapted to the brake activation arrangement shown in the wiring diagram. If the values set for the brake release and application times are too short, e.g. for long response times in the brake control system, hoists, for example, may sag.

6.10 Mains and the motor connection

6.10.1 Permitted voltage supply systems

	NOTE
	MOVITRAC® B is intended to be operated on mains systems with a directly grounded star point (TN and TT systems). Operation on mains systems with a non-grounded star point (for example IT power systems) is also permitted. SEW recommends using an earth-leakage monitor for this according to the PCM (pulse code measuring) principle. Using such devices prevents the earth-leakage monitor from mis-tripping due to the ground capacitance of the inverter.

6.10.2 Input contactors and input fuses

Mains contactor

- Only use mains contactors of utilization category AC-3 (EN 60947-4-1).

Mains activations

- Ensure a minimum time of 120 s between two mains activations for AC 230 V / 1-phase units.

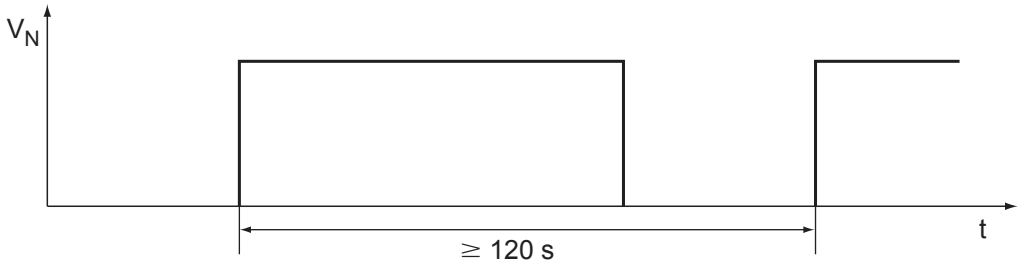

- Maintain a minimum switch-off time of 10 s for 3-phase units.

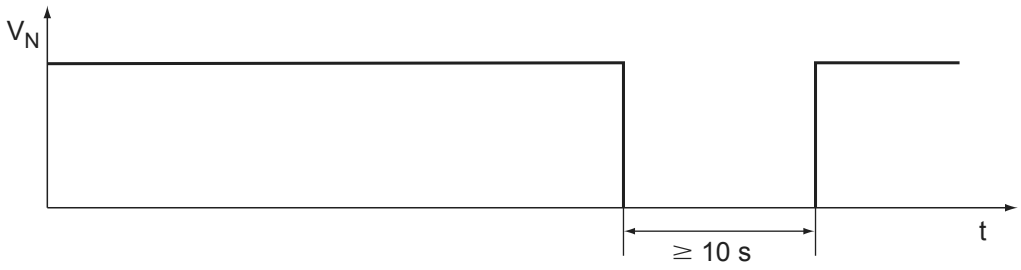

	NOTE
	• Do not use the K11 input contactor for jog mode, but only for switching the inverter on and off. Use the following commands for jog mode: – Enable/Stop – CW/Stop – CCW/Stop

Mains fuses

Fusing types:

- Line protection types in the operating classes gL, gG:
  - Rated fusing voltage ≥ Rated supply voltage
  - Rated fusing current must be designed for 100 % or 125 % of the rated inverter current depending on the inverter utilization.
- Line protection switches with characteristics B, C:
  - Circuit breaker rated voltage ≥ Mains rated voltage
  - Circuit breaker rated currents must be 10 % above the rated inverter current.

6.10.3 Line protection and core cross-section

Comply with the regulations of the specific country and for the specific machine regarding fusing and selecting cable cross-sections. Also comply with the instructions for **UL-compliant installation** if necessary.

Always size the shared neutral conductor for the total current when using several 1-phase units. Also size it according to the total current even if the units are connected distributively to the three mains phases. This is because the third supply system harmonics are always cumulative.

Select the cable cross-section of the motor lead so the voltage drop is as small as possible. An excessively high voltage drop means that the full motor torque is not achieved.

Smallest bending space (EN 61800-5-1)

As stipulated in EN 61800-5-1, the distance between a power connection terminal and an obstruction toward which the wire is directed on leaving the terminal must correspond with the minimum values given in the table below.

Cable cross-section [mm^2 (in^2)]	Smallest bending space [mm (in)] Wires per connection terminal		
	1	2	3
10 ... 16 (0.016 ... 0.025)	40 (1.6)	–	–
25 (0.039)	50 (2.0)	–	–
35 (0.054)	65 (2.6)	–	–
50 (0.078)	125 (4.92)	125 (4.92)	180 (7.09)
70 (0.11)	150 (5.91)	150 (5.91)	190 (7.48)
95 (0.15)	180 (7.09)	180 (7.09)	205 (8.07)
120 (0.186)	205 (8.07)	205 (8.07)	230 (9.06)
150 (0.233)	255 (10.0)	255 (10.0)	280 (11.0)
185 (0.287)	305 (12.0)	305 (12.0)	330 (13.0)

Recommendation for standard installation, metric

If single-core copper cables with PVC insulation routed in cable ducts are used, SEW-EURODRIVE proposes the following cable cross-sections and fuses for an ambient temperature of 25 °C (77 °F) and rated mains currents of 100 % of the rated inverter current:

MOVITRAC® B 1 × 230 V		0003	0004	0005	0008	0011	0015	0022
Single phase	Line protection	C16[1] / gL16 / K16				C32[2] / gL25 / K25 / D20		
	Supply system lead	1.5 mm² (0.0023 in²)				4 mm² (0.0062 in²)		
	PE conductor	2 x 1.5 mm² (0.0023 in²)				2 x 4 mm² (0.0062 in²)		
Motor cable		1.5 mm² (0.0023 in²)				1.5 mm² (0.0023 in²)		
Unit terminal cross-section of the power section		Disconnectable terminal strip 4 mm² (0.0062 in²) conductor end sleeve DIN 46228 (German Industrial Standard)						

1) If there has been a pause of at least two minutes between turning the unit off and on again: B16

2) If there has been a pause of at least two minutes between turning the unit off and on again: B32

MOVITRAC® B 3 × 230 V		0003	0004	0005	0008	0011	0015	0022
3-phase	Line protection	10 A					16 A	
	Supply system lead	1.5 mm² (0.0023 in²)				4 mm² (0.0062 in²)		
	PE conductor	2 x 1.5 mm² (0.0023 in²)				2 x 4 mm² (0.0062 in²)		
Motor cable		1.5 mm² (0.0023 in²)				1.5 mm² (0.0023 in²)		
Unit terminal cross-section of the power section		Disconnectable terminal strip 4 mm² (0.0062 in²) conductor end sleeve DIN 46228 (German Industrial Standard)						

MOVITRAC® B 3 × 230 V	0037	0055	0075	0110	0150	0220	0300
Fuses F11/F12/F13 I_{Rated}	25 A	25 A	35 A	50 A	63 A	80 A	100 A
Supply system lead L1/L2/L3	4 mm² (0.0062 in²)	4 mm² (0.0062 in²)	6 mm² (0.0093 in²)	10 mm² (0.0155 in²)	16 mm² (0.0248 in²)	25 mm² (0.0388 in²)	35 mm² (0.0543 in²)
PE conductor	2 × 4 mm² (0.0062 in²) 1 × 10 mm² (0.0155 in²)	2 × 4 mm² (0.0062 in²) 1 × 10 mm² (0.0155 in²)	2 × 6 mm² (0.0093 in²) 1 × 10 mm² (0.0155 in²)	1 × 10 mm² (0.0155 in²)	1 × 16 mm² (0.0248 in²)	1 × 16 mm² (0.0248 in²)	1 × 16 mm² (0.0248 in²)
Motor feeder U/V/W	4 mm² (0.0062 in²)	4 mm² (0.0062 in²)	6 mm² (0.0093 in²)	10 mm² (0.0155 in²)	16 mm² (0.0248 in²)	25 mm² (0.0388 in²)	35 mm² (0.0543 in²)
Unit terminal cross-section of the power section	Separable terminal strip 4 mm² (0.0062 in²) conductor end sleeve DIN 46228 (German Industrial Standard)	M4 screw and washer assembly with terminal clip 4 mm² (0.0062 in²) conductor end sleeve DIN 46228 (German Industrial Standard) 6 mm² (0.0093 in²) crimp cable lug DIN 46234 (German Industrial Standard)		M6 screw and washer assembly with washer max. 25 mm² (0.0388 in²) Crimp cable lug DIN 46234		M10 bolt with nut max. 70 mm² (0.1085 in²) Press cable lug DIN 46235	

MOVITRAC® B 400 / 500 V		0003	0004	0005	0008	0011	0015	0022	0030	0040	0055	0075
3-phase	Line protection	10 A					16 A				16 A	16 A
	Supply system lead	1.5 mm² (0.0023 in²) / AWG16									1.5 mm² (0.0023 in²)	1.5 mm² (0.0023 in²)
	PE conductor	2 x 1.5 mm² (0.0023 in²) / 2 x AWG16					2 x 1.5 mm² (0.0023 in²) / 2 x AWG16 1 x 10 mm² (0.0155 in²) / 1 x AWG8				2 x 1.5 mm² (0.0023 in²) 1 x 10 mm² (0.0155 in²)	2 x 1.5 mm² (0.0023 in²) 1 x 10 mm² (0.0155 in²)
Motor cable		1.5 mm² (0.0023 in²) / 2 x AWG16									1.5 mm² (0.0023 in²)	2.5 mm² (0.0038 in²)
Unit terminal cross-section of the power section		Disconnectable terminal strip 4 mm² (0.0062 in²) conductor end sleeve DIN 46228 (German Industrial Standard)									M4 screw and washer assembly with terminal clip 4 mm² (0.0062 in²) conductor end sleeve DIN 46228 (German Industrial Standard)	

MOVITRAC® B 400 / 500 V		0110	0150	0220	0300
3-phase	Line protection	25 A	35 A	50 A	63 A
	Supply system lead	4 mm² (0.0062 in²)	6 mm² (0.0093 in²)	10 mm² (0.0155 in²)	16 mm² (0.0248 in²)
	PE conductor	2 x 4 mm² (0.0062 in²) 1 x 10 mm² (0.0155 in²)	2 x 6 mm² (0.0093 in²) 1 x 10 mm² (0.0155 in²)	1 x 10 mm² (0.0155 in²)	1 x 16 mm² (0.0248 in²)
Motor cable		4 mm² (0.0062 in²)	6 mm² (0.0093 in²)	10 mm² (0.0155 in²)	16 mm² (0.0248 in²)
Unit terminal cross-section of the power section		M4 screw and washer assembly with terminal clip 4 mm² (0.0062 in²) conductor end sleeve DIN 46228 (German Industrial Standard) 6 mm² (0.0093 in²) crimp cable lug DIN 46234 (German Industrial Standard)	M6 screw and washer assembly with washer max. 25 mm² (0.0388 in²) Crimp cable lug DIN 46234		

MOVITRAC® B 400 / 500 V		0370	0450	0550	0750
3-phase	Line protection	80 A	100 A	100 A	125 A
	Supply system lead	25 mm² (0.0388 in²)	35 mm² (0.0543 in²)	35 mm² (0.0543 in²)	50 mm² (0.0775 in²)
	PE conductor	1 x 16 mm² (0.0248 in²)			25 mm² (0.0388 in²)
Motor cable		25 mm² (0.0388 in²)	35 mm² (0.0543 in²)	35 mm² (0.0543 in²)	50 mm² (0.0775 in²)
Unit terminal cross-section of the power section		Bolt M10 with nut max. 70 mm² (0.1085 in²) crimp cable lug DIN 36235 (German Industrial Standard)			

Recommendation for standard installation, USA NEC

MOVITRAC® B 1 × 230 V		0003	0004	0005	0008	0011	0015	0022
Single phase	Line protection	C16[1] / gL16 / K16				C32[2] / gL25 / K25 / D20		
	Supply system lead	AWG16				AWG12		
	PE conductor	2 x AWG16				2 x AWG12		
Motor cable		AWG16				AWG16		
Unit terminal cross-section of the power section		Separable terminal strip AWG10 conductor end sleeve						

1) If there has been a pause of at least two minutes between turning the unit off and on again: B16

2) If there has been a pause of at least two minutes between turning the unit off and on again: B32

MOVITRAC® B 3 × 230 V		0003	0004	0005	0008	0011	0015	0022
3-phase	Line protection	10 A					16 A	
	Supply system lead	AWG16				AWG12		
	PE conductor	2 x AWG16				2 x AWG12		
Motor cable		AWG16				AWG16		
Unit terminal cross-section of the power section		Separable terminal strip AWG10 conductor end sleeve						

MOVITRAC® B 3 × 230 V	0037	0055	0075	0110	0150	0220	0300
Fuses F11/F12/F13 I_{Rated}	25 A	25 A	35 A	50 A	63 A	80 A	100 A
Supply system lead L1/L2/L3	AWG12	AWG12	AWG10	AWG6	AWG4	AWG4	AWG3
PE conductor	AWG12	AWG12	AWG10	AWG10	AWG8	AWG8	AWG6
Motor feeder U/V/W	AWG12	AWG10	AWG10	AWG6	AWG4	AWG4	AWG3
Unit terminal cross-section of the power section	Separable terminal strip AWG10 conductor end sleeve	M4 screw and washer assembly with terminal clip AWG10 conductor end sleeve AWG10 crimp cable lug		M6 screw and washer assembly with washer max. AWG10 crimp cable lug		M10 bolt with nut max. AWG2/0 crimp cable lug	

MOVITRAC® B 400 / 500 V	0003	0004	0005	0008	0011	0014	0015	0022	0030	0040
Size	0						1			
Fuses F11/F12/F13 I_{Rated}	6 A							10A		15 A
Supply system lead L1/L2/L3	AWG14						AWG14			
PE conductor	AWG14						AWG14			
Motor feeder U/V/W	AWG14						AWG14			
Unit terminal cross-section of the power section	Separable terminal strip AWG10 conductor end sleeve						Separable terminal strip AWG10 conductor end sleeve			

MOVITRAC® B 400 / 500 V	0055	0075	0110	0150	0220	0300
Size	2			3		
Fuses F11/F12/F13 I_{Rated}	20 A		30 A	40 A	60 A	80 A
Supply system lead L1/L2/L3	AWG12		AWG10	AWG8	AWG6	AWG4
PE conductor	AWG12		AWG10	AWG10		AWG8
Motor feeder U/V/W	AWG12		AWG10	AWG8	AWG6	AWG4
Unit terminal cross-section of the power section	M4 screw and washer assembly with terminal clip AWG10 conductor end sleeve AWG10 crimp cable connector			M6 screw and washer assembly with washer max. AWG4 crimp cable lug		

MOVITRAC® B 400 / 500 V	0370	0450	0550	0750
Size	4		5	
Fuses F11/F12/F13 I_{Rated}	90 A	110 A	150 A	175 A
Supply system lead L1/L2/L3	AWG4	AWG3	AWG1	AWG2/0
PE conductor	AWG8	AWG6	AWG6	AWG6
Motor feeder U/V/W	AWG4	AWG3	AWG1	AWG2/0
Unit terminal cross-section of the power section	M10 bolt with nut max. AWG2/0 crimp cable lug			

6.10.4 Motor cable length

The maximum motor cable length depends on:

- Cable type
- Voltage drop in the cable
- Set PWM frequency.
- Using an output filter

The limit values in the tables do not apply if you use and output filter. The motor cable length is then solely limited by the voltage drop on the motor cable.

MOVITRAC® B:		Permitted maximum motor cable length in m (ft)			
Size		**0XS / 0S / 0L**		**2S 0055**	**2S 0075 / 2 / 3 / 4 / 5**
V_{Mains} voltage		**3 × AC 400 V 3 × AC 230 V 1 × AC 230 V**	**3 × AC 500 V 3 × AC 400 V (125 % I_{Rated})**	**400 / 500 V**	
Shielded cable	4 kHz[1)]	100 (330)	50 (165)	300 (990)	400 (1320)
	8 kHz	70 (231)	35 (116)	250 (825)	300 (990)
	12 kHz	50 (165)	25 (83)	200 (660)	250 (825)
	16 kHz	40 (132)	25 (83)	150 (495)	200 (660)
Unshielded cable	4 kHz[1)]	200 (660)	100 (330)	900 (2970)	1200 (3960)
	8 kHz	140 (462)	70 (231)	750 (2475)	900 (2970)
	12 kHz	100 (330)	50 (165)	600 (1980)	750 (2475)
	16 kHz	80 (264)	50 (165)	450 (1485)	600 (1980)

1) Standard setting

NOTE

Do not use an earth-leakage circuit breaker with long motor cables. The earth-leakage currents caused by cable capacitance may cause mis-tripping.

6.10.5 Voltage drop

Select the cable cross-section of the motor cable so that the **voltage drop is as small as possible**. An excessively high voltage drop means that the full motor torque is not achieved.

You can determine the expected voltage drop using the following tables. For shorter cables, you can calculate the voltage drop by converting in proportion to the length.

Cable cross section	Load with I [A] =															
	4	6	8	10	13	16	20	25	30	40	50	63	80	100	125	150
Copper	Voltage drop Δ U [V] with length = 100 m (330 ft) and |ϑ = 70 °C (158 °F)															
1.5 mm² (0.0023 in²)	5.3	8	10.6	13.3	17.3	21.3	1)									
2.5 mm² (0.0038 in²)	3.2	4.8	6.4	8.1	10.4	12.8	16									
4 mm² (0.0062 in²)	1.9	2.8	3.8	4.7	6.5	8.0	10	12.5								
6 mm² (0.0093 in²)					4.4	5.3	6.4	8.3	9.9							
10 mm² (0.0155 in²)						3.2	4.0	5.0	6.0	8.2	10.2					
16 mm² (0.0248 in²)								3.3	3.9	5.2	6.5	7.9	10.0			
25 mm² (0.0388 in²)									2.5	3.3	4.1	5.1	6.4	8.0		
35 mm² (0.0543 in²)											2.9	3.6	4.6	5.7	7.2	8.6
50 mm² (0.0775 in²)														4.0	5.0	6.0

1) Load not permitted, in accordance with VDE 0100 part 430.

Cable cross section	Load with I [A] =															
	4	6	8	10	13	16	20	25	30	40	50	63	80	100	125	150
Copper	Voltage drop Δ U [V] with length = 100 m (330 ft) and |ϑ = 70 °C (158 °F)															
AWG16	7.0	10.5	1)													
AWG14	4.2	6.3	8.4	10.5	13.6											
AWG12	2.6	3.9	5.2	6.4	8.4	10.3	12.9									
AWG10					5.6	6.9	8.7	10.8	13.0							
AWG8						4.5	5.6	7.0	8.4	11.2						
AWG6								4.3	5.1	6.9	8.6	10.8	13.7			
AWG4									3.2	4.3	5.4	6.8	8.7	10.8	13.5	
AWG3									2.6	3.4	4.3	5.1	6.9	8.6	10.7	12.8
AWG2											3.4	4.2	5.4	6.8	8.5	10.2
AWG1												3.4	4.3	5.4	6.8	8.1
AWG1/0												2.6	3.4	4.3	5.4	6.8
AWG2/0													2.7	3.4	4.3	5.1

1) More than 3 % voltage drop in relation to V_{Mains} = 460 V_{AC}.

6.11 Multi-motor drive / group drive

Group drives are mechanically decoupled from each other (e.g., different conveyor belts). In this operating mode, the inverter operates without slip compensation and with a constant V/f ratio.

Multi-motor drives are mechanically coupled to each other (e.g., chain drive with multiple motors). Observe the notes in the publication "Multi-Motor Drives".

6.11.1 Motor currents

The total of the motor currents must not exceed the rated output current of the inverter.

6.11.2 Motor cable

You can calculate the permitted total length of all motor cables connected in parallel as follows:

$$I_{total} \leq \frac{I_{max}}{n}$$

I_{total} = Total length of the motor cables connected in parallel

I_{max} = Recommended maximum motor cable length for individual drives

n = Number of motors connected in parallel

6.11.3 Motor size

The motors in a group must not be more than 3 type sizes apart.

6.11.4 Output filter

There is no need for an output filter with smaller groups of two to three motors. An HF… output filter is required if the maximum motor cable length (I_{max}) given in the table is not adequate. This may be the case in large groups (n) or when there are long motor cable lengths connected in parallel (I_{tot}) In this case, it is the voltage drop on the motor cable that limits the maximum motor cable length, not the limit value in the table. The total of the rated motor currents must not exceed the rated through-current of the output filter.

6.12 Line chokes

6.12.1 1-phase

Use is optional in the following instances:

- Reduction in the mains current harmonics
- Support for overvoltage protection

Use is required under the following circumstances:

- Mains inductances of less than 100 µH per branch
- For limiting the inrush current when operating more than one unit on a shared mains contactor

6.12.2 3-phase

Use is optional for supporting overvoltage protection.

Use is required for limiting the inrush current when operating more than 4 units on a mains contactor.

6.12.3 Connecting several 1-phase inverters on one 3-phase line choke

Requirements for connecting several 1-phase inverters to one 3-phase line choke:

- Design the input contactor for at least the total current.
- The fuse must correspond to at least the rated current of the line choke.
- Connect the MOVITRAC® B frequency inverters with identical configuration to the line choke.

Example: Two 1-phase inverters on one 1-phase line choke

2 MOVITRAC® MC07B0008-2B1 units (0.75 kW [1.0 HP]) are connected to one line choke ND 020-151. The inverters have a rated current of 9.9 A.

Make sure the cable cross-section corresponds to the selected fuse. In addition, you must configure the neutral conductor in accordance with the total current.

Connecting two 1-phase inverters to one 1-phase line choke

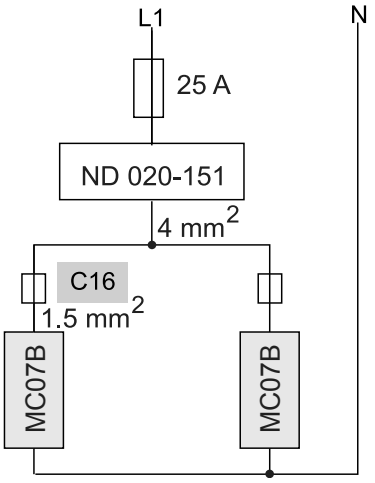

Example: Nine 1-phase inverters on one 3-phase line choke

9 MOVITRAC® MC07B-0008-2B1-00 units (0.75 kW [1.0 HP]) are connected to a 3-phase line choke ND 035-073. The inverters have a rated current of 9.9 A.

Make sure the cable cross-section corresponds to the selected fuse. In addition, you must configure the neutral conductor in accordance with the total current.

Connection of several inverters on one 3-phase line choke

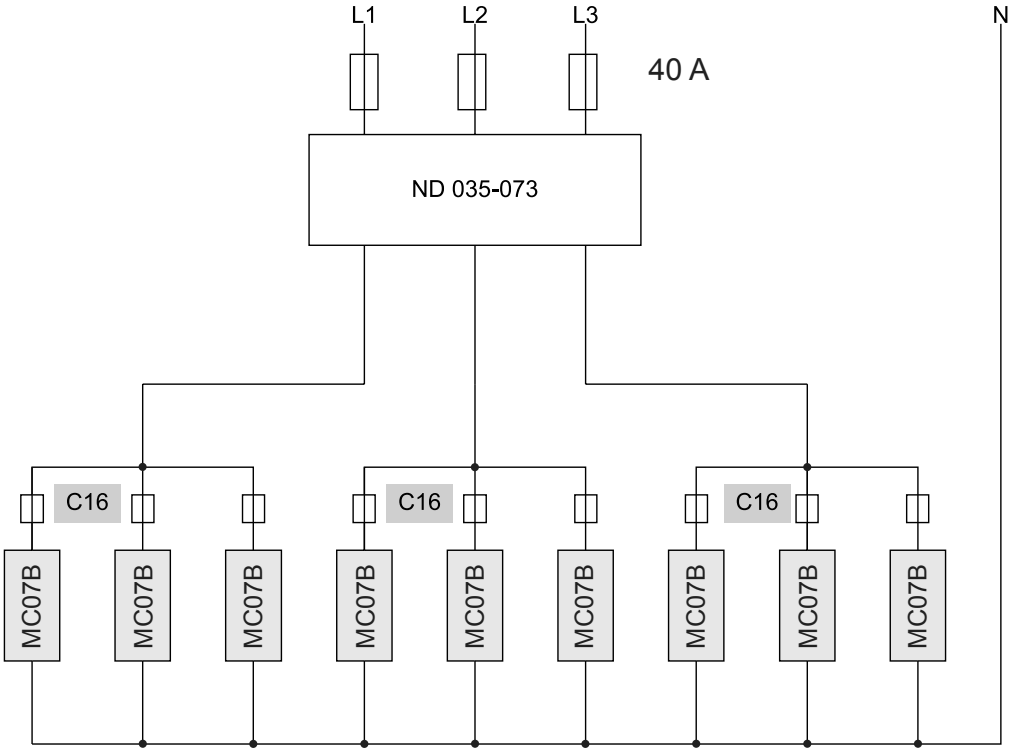

6.13 Electromagnetic compatibility (EMC)

MOVITRAC® B frequency inverters are components of machines and systems. They comply with the EMC product standard EN 61800-3 **variable-speed electrical drives**. If you want to equip the machine / system with frequency inverters compliant with the EMC directive 89/336/EEC: Adhere to the notes on EMC compliant installation.

Compliance with EMC limit value class C1 / B has been tested on a specified test setup. Compliance with signal interference class C1 / B achieved by the proper installation of the flat ferrites ULF11A.

6.13.1 Interference immunity

MOVITRAC® B meets the minimum requirements stipulated in EN 61800-3 with regard to interference immunity.

6.13.2 Interference emission

The interference emission of MOVITRAC® B was tested using standard equipment. The limit values complied with allow the units to be used in both the industrial and private sphere. The following measures are recommended depending on the target limit value class. Higher levels of interference are permitted in industrial environments. In industrial environments, you can dispense with the measures listed below depending on the situation of the mains supply and the system configuration.

Limit value class

The following possible solutions exist for EMC-compliant installation, depending on the system configuration. Perform an EMC compliant installation.

Limit value class C1 and C2 according to EN 61800-3; A and B according to EN 55014.

Limit value class		**Input side**		**Output side**	
Size		**0**		**0**	
Voltage		**230 V 1-phase**	**400/500 V / 230 V 3-phase**	**230 V 1-phase**	**400/500 V / 230 V 3-phase**
C2 (A)		No additional filtering required		HD012 output choke or shielded motor cable	
C1 (B)	Cable conducted	No additional filtering required	Line filter NF or EMC module FKE	Shielded motor cable	HD012 output choke, shielded motor cable or EMC module FKE
	Radiation conducted	Foldable ferrites[1)]			

1) 3 foldable ferrites over the supply system cables L and N (without PE)

Limit value class	**Input side**		**Output side**	
Size	**1 / 2S / 2**	**3 / 4 / 5**	**1 / 2S / 2**	**3 / 4 / 5**
Voltage	**400/500 V / 230 V 3-phase**		**400/500 V / 230 V 3-phase**	
C2 (A)	No additional filtering required	NF line filter	HD output choke or shielded motor cable	
C1 (B)	NF line filter			

The unit complies with the cable conduction and radiation requirements of limit value class C2 / A. Cable conduction requirements for limit value class C1 / B are also met. When additional measures are implemented, limit value class C1 / B can also be maintained for emissions.

6.13.3 Connection

Observe the "Installation" section for EMC-compliant connection.

6.13.4 Reducing earth-leakage currents (size 0 only)

You can deactivate the suppression capacitors to PE (see section "Installation / Installation for IT systems") to reduce earth-leakage currents in the inverter.

The earth leakage currents are determined mainly by:

- The amount of DC link voltage
- The PWM frequency
- The motor cable used and its length
- The motor used

When the suppression capacitors are deactivated, the EMC filter is no longer active.

6.13.5 IT systems

	NOTES
	• No EMC limits are specified for interference emission in voltage supply systems without an NF earthed star point (IT systems). The effectiveness of line filters is severely limited. • In size 0, you can deactivate the suppression capacitors. See the section "Installation / Installation for IT systems." • It is important that you deactivate the suppression capacitors when using earth-leakage monitors with pulse code measurement.

6.14 HF… output filter type

6.14.1 Important notes

Observe the following instructions when using output filters:

- Do not use output filters in hoist applications.
- During project planning of the drive, take into account the voltage drop in the output filter and consequently the reduced motor torque available. This applies particularly to AC 230 V units with output filters.
- Flying restart circuit is not possible with output filter HF...

6.14.2 Installation, connection and operation

NOTES

- Install output filters next to the corresponding inverter. Leave a ventilation space of at least 100 mm (3.94 in) below and above the output filter. No clearance is required on the sides.
- Limit the connection cable between the inverter and output filter to the absolute minimum length required. Maximum 1 m (3.3 ft) with an unshielded cable and 10 m (33 ft) for a shielded cable.
- An unshielded motor cable is sufficient when using an output filter. Note the following instructions when you are using an **output filter together with a shielded motor cable:**
  - The maximum permitted length of the motor cable for operation without V_{DC} link connection is 20 m (65.6 ft).
  - Operation with V_{DC} link connection is required if the motor cable is longer than 20 m (65.6 ft).
  - Observe the notes "Operation with V_{DC} link connection" on the next page.
- The rated through current of the output filter must be higher than or equal to the output current of the inverter. Note whether the projected output current of the inverter is 100 % I_{Rated} (= rated output current) or 125 % I_{Rated} (= continuous output current).
- Several motors can be connected together to one output filter when operating a motor group from one inverter. The total value of the rated motor currents must not exceed the rated throughput current of the output filter.
- It is possible to connect two output filters of the same type to one inverter output to increase the rated through current. All like connections must be connected in parallel to the output filters.
- Considerable noise (magnetostriction) may occur in the output filter especially if operating with f_{PWM} = 4 kHz. In environments susceptible to noise, SEW-EURODRIVE recommends operation with f_{PWM} = 12 kHz (or 16 kHz) and V_{DC} link connection. Observe the notes for V_{DC} link connection.
- When the inverter is operated with f_{PWM} = 4 or 8 kHz, the output filter connection V5 (with HF…-503) or 7 (with HF…-403) must **not** be connected (no V_{DC} link connection).

6.14.3 V_{DC} link connection

Operation without V_{DC} link connection:

- Approved only for PWM frequency 4 kHz or 8 kHz.

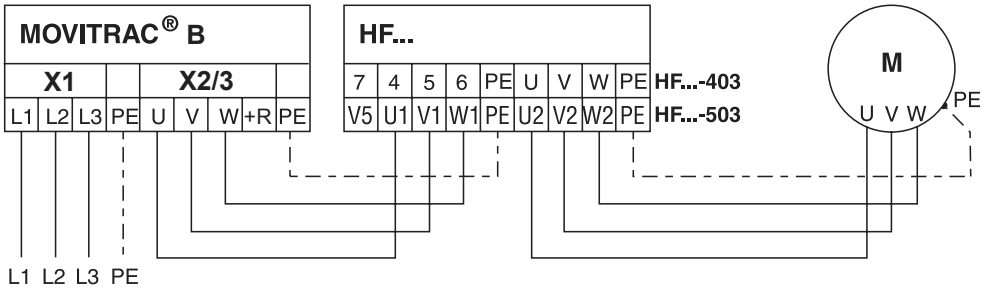

NOTES

Operation with V_{DC} link connection (from 3.7 kW [5.0 HP] 230 V / 5.5 kW [7.4 HP] 500 V)

(Connection of inverter terminal + R with HF…-503 terminal V5 or HF…-403 terminal 7):

- Optimized grounded filter effect.
- Improved filter effect in the low-frequency range (≤ 150 kHz).
- Only approved for PWM frequency 12 kHz or 16 kHz. Note that increased losses (= power reduction) occur in the inverter when operating with 12 kHz or 16 kHz.
- Set PWM fix = on; the inverter must not be able to reduce the PWM frequency automatically
- Strictly observe the following for HF...-403: V_{DC} link connection only permitted if V_{Mains} ≤ AC 400 V, not with V_{Mains} = AC 500 V.
- The V_{DC} link connection increases the inverter load. The DC link connection increases the required inverter output current in relation to the rated output current of the inverter as shown in the following table.

f_{PWM}	V_{mains} = 3 x AC 230 V	V_{mains} = 3 x AC 400 V	V_{mains} = 3 x AC 500 V
12 kHz	4 %	12 %	15 %
16 kHz	3 %	8 %	12 %

The increased power requirement causes an additional load on the inverter. Take this aspect into account during project planning of the drive. Failure to comply with this aspect may cause the inverter to shut down due to overload.

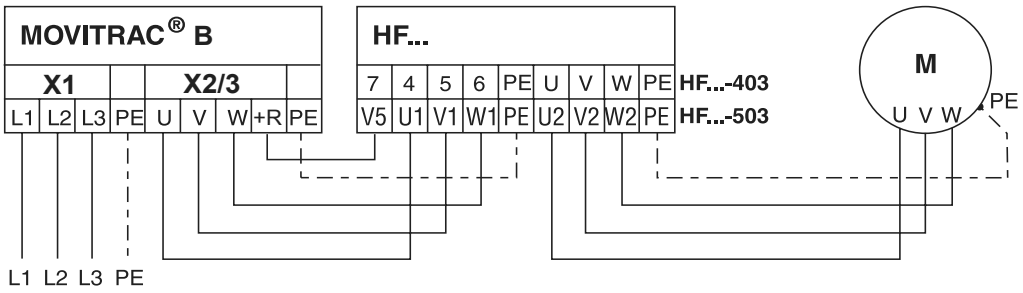

The procedure for selecting the PWM frequency and checking the inverter is summarized in the following figure.

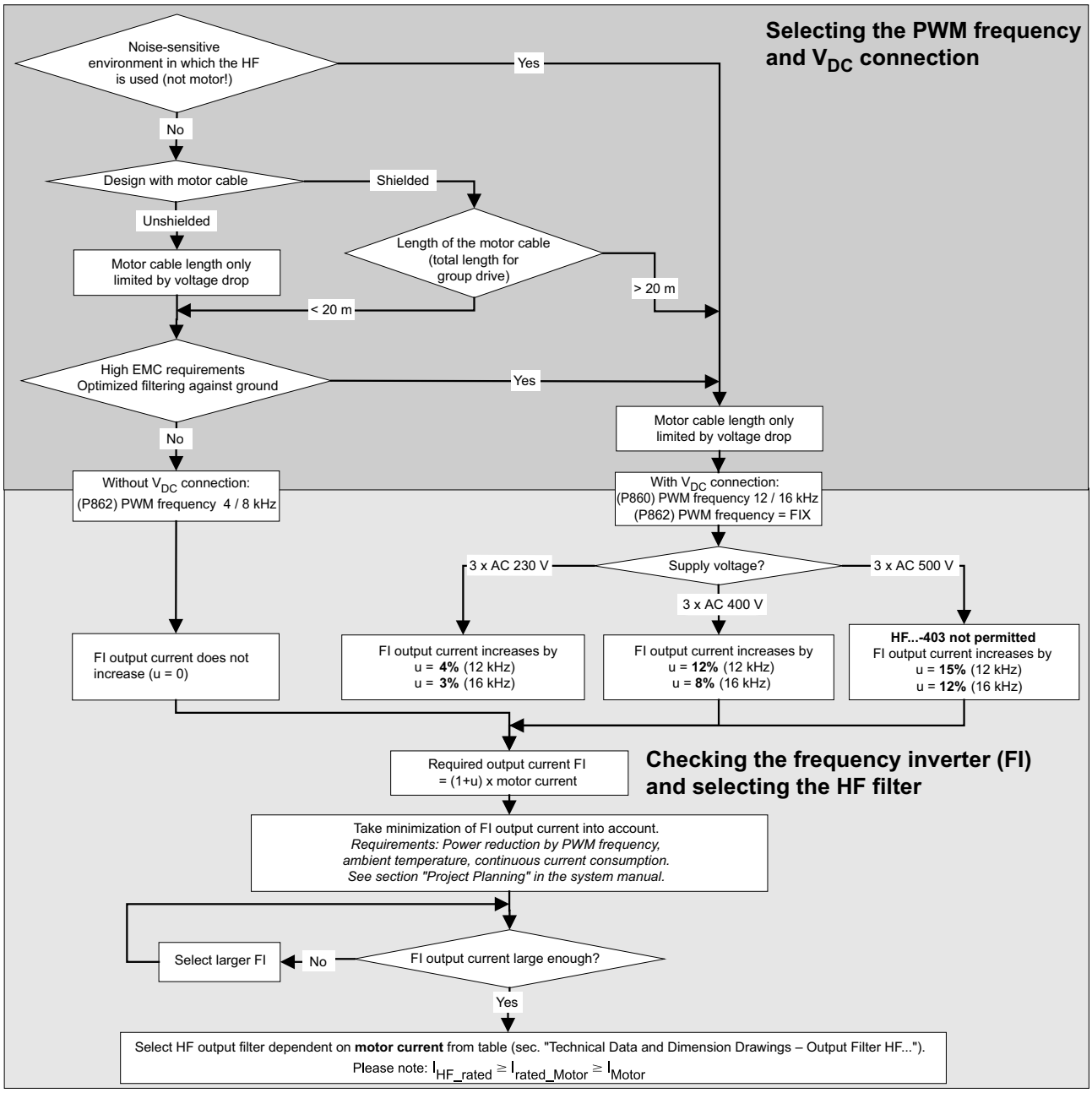

6.15 Electronics cables and signal generation

6.15.1 Cable type

The electronic terminals are suitable for:

- Cross-sections of up to 1.5 mm^2 (AWG16) without conductor end sleeves
- Cross-sections of up to 1.0 mm^2 (AWG17) with conductor end sleeves

Use shielded cables as standard. Ground the shield at both ends. Route electronics cables separately from power cables and leads to contactor controls or braking resistors.

6.15.2 0 V cables

Never connect 0 V cables GND for generating signals. The 0V cables of several electrical units which are connected should not be looped from unit to unit, but rather wired up in a star configuration. This means:

- Install the units in adjacent switch cabinet compartments rather than distributing them widely.
- Lay the 0 V cables with at least a 1 mm^2 (AWG17) cross-section from a central point to each individual unit by the shortest possible route.

6.15.3 Coupling relays

You can use coupling relays for electrical isolation of the binary inputs and binary outputs to the functional ground. Use only coupling relays with encapsulated, dust-protected electronic contacts. The relays must be suitable to switch small voltages and current (5 ... 30 V, 0.1 ... 20 mA).

6.16 External voltage supply DC 24 V

The internal voltage supply is sufficient for the basic unit and binary output up to 200 mA (DO02: 150 mA; DO03: 50 mA). FBG11B, FSC11B with options DBG60B, USB11A, UWS21A, or UWS21B can also be supplied by the internal voltage supply.

The MOVITRAC® B can be supplied via an external DC 24 V voltage supply. This is useful, for example, with bus operation. The voltage supply must be sized large enough to operate the digital outputs also. Fieldbus options always require an external voltage supply,

In this case, you must always switch on the external DC 24 V power supply unit prior to the mains contactor or after switching off the mains contactor.

DC 24 V power demand of MOVITRAC® B:

Size	Basic unit power demand[1]	DBG60B	FIO11B	Fieldbus option[2][3]	DHP11B[3]
Size 0 MC07B…-00	5 W (0.007 HP)	1 W (0.001 HP)	2 W (0.003 HP)	3 W (0.004 HP)	4.5 W (0.0060 HP)
Size 0 MC07B…-S0	12 W (0.016 HP)				
1, 2S, 2	17 W (0.023 HP)				
3	23 W (0.031 HP)				
4, 5	25 W (0.034 HP)				

1) FBG11B, FSC11B (UWS11A/USB11A) included. The load of the binary outputs must also be taken into account with 2.4 W (0.0032 HP) per 100 mA.

2) Fieldbus options are: DFP21B, DFD11B, DFE11B, ...

3) These options must always be externally supplied also.

NOTES

When using an auxiliary voltage for the backup mode on VIO24, you must ensure that the backup voltage is always applied in mains operation because other units connected to VIO24 by MOVITRAC® B are otherwise supplied in mains operation without a backup voltage supply.

The maximum current load for looping through the backup voltage supply from VIO24 / basic unit to VIO24 / FSC/FIO is 1 A.

6.16.1 Example

MC07B0015-5A3-4-00/DFP21B with options FSC11B & FBG11B. MOVITRAC® B supplies the binary inputs DI01 (CW/Stop) and DI03 (Enable) with voltage. The motor brake is controlled via DO02. The brake coil of the brake relay requires 100 mA at DC 24 V. The master PLC evaluates the fault signal contact via DO00 at current consumption of 50 mA.

Calculating the total power demand:

- Power demand of the basic unit (incl. FSC11B and power supply of the binary inputs): 5 W (0.007 HP)
- Power demand of the DFP21B fieldbus option: 3 W (0.004 HP)
- Power demand of the brake coil: 0 W (0 HP) because output is 0 active in DC 24 V operation.
- Power demand of the fault signal contact: 24 V x 0.05 A = 1.2 W (0.0016 HP)

The total power demand is 9.2 W (0.012 HP). An external DC 24 V power supply is required in this case.

6.17 Parameter set switchover

This function serves for operating two motors on one inverter using two different parameter sets.

The parameter set is switched over via binary input or fieldbus. A binary input must be programmed to the "Parameter set switch-over" function (→ P60_/P61_) for this purpose. You can then change from parameter set 1 to 2 and vice versa in INHIBITED inverter status.

Function	In effect with	
	"0" signal	"1" signal
PARAM. SELECT	Parameter set 1 active	Parameter set 2 active

	NOTE
	A changeover contactor should be provided for each of the two motor cables when two motors are operated alternately on the same inverter with the parameter set switchover function in use (→ P60_/P61_ parameter set switchover). Only switch changeover contactors when the unit is inhibited!

6.18 Priority of the operating statuses and interrelation between control signals

6.18.1 Priority of the operating states

The following illustration shows the priority of operating statuses:

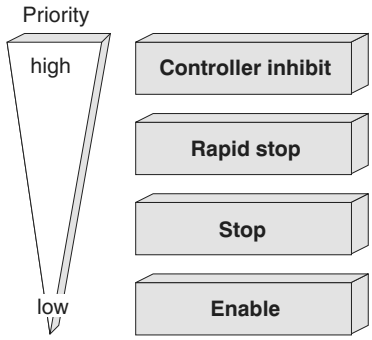

6.18.2 Interrelation between control signals

The following table shows the interrelation between control signals. "CW/Stop" is programmed to binary input DIØ1 and cannot be changed. The other control signals are only in effect if a binary input is programmed to this function (→ parameter P60_).

/Controller inhibit	Binary input is programmed to			Inverter status
	Enable/ Rapid stop	CW/Stop (DI01)	CCW/Stop	
"0"	1)	1)	1)	Inhibited
"1"	"0"	2)	2)	
"1"	"1"	"1"	"0"	CW enabled
"1"	"1"	"0"	"1"	CCW enabled

1) Not relevant when the binary input is on controller inhibit and "/Control inhibit" = "0"

2) Not relevant if "Enable/Rapid stop" = "0"

Linking control signals:

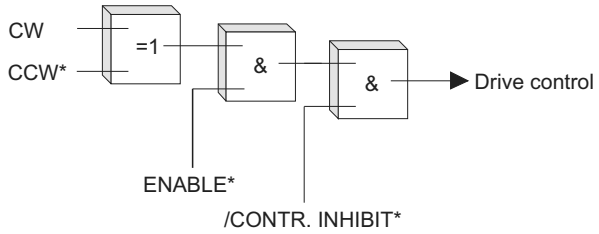

* If a binary input is programmed to this function.

6.19 PI controller

You can use the implemented PI controller for temperature control, pressure control or other applications. The PI controller can be switched on and off.

Structural diagram showing installation of the PI controller

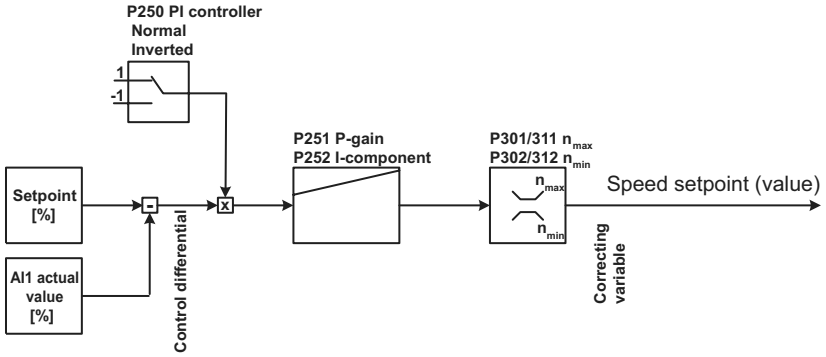

Connect the actual value from the sensor (temperature, pressure, etc.) to analog input AI1. You can scale the actual value up or down and assign an offset value, thereby adapting it to the working range of the PI controller.

You can set the setpoint of the PI controller using one of the 6 programmable fixed setpoints, or you can specify the setpoint via the RS-485 interface or fieldbus (SBus) (*P100=Setpoint source*). Furthermore you can specify the setpoint using the local setpoint potentiometer.

The correcting variable of the PI controller is a speed setpoint limited to the minimum and maximum speed (*P301 = Minimum speed 1* and *P302 = Maximum speed 1*). The setting of the speed ramp times has no effect when the PI controller is active.

Default parameter settings are shown in **bold** below.

6.19.1 Parameter setting

Activating the PI controller

Switch the PI-controller on and off using parameter P250. The values set for setpoint and actual values mentioned in the beginning are active when you switch on the PI controller.

The *Normal* setting increases the correcting variable if there is a positive system deviation; the correcting variable is reduced if there is a negative system deviation.

The *Inverted* setting increases the correcting variable if there is a negative system deviation; the correcting variable is reduced if there is a positive system deviation.

P 250	PI controller	**Off**
		Normal
		Inverted

Controller parameters

You can adapt the controller to the application using the following settings:

P 251	P-gain	0 ... **1** ... 64	Step width:	0.01
P 252	I-component	0 ... **1** ... 2000 [s]	Range: 0 0.01 ... 0.99 1.0 ... 9.9 10 ... 99 100 ... 2000	Step width: I-component OFF 0.01 0.1 1 10

6.19.2 Setpoint selection

The following settings are possible as the setpoint source. You can select the setpoint source with parameter P100.

- **Unipolar / Fixed setpoint**: The setpoint zero applies as long as no setpoint is selected. The FBG setpoint control module can be added to setpoint zero or a fixed setpoint using P121.

  P163/164/165 Setpoint n11/12/13 scales PI controller [0 … 100 %] step width: 0.1 %

  P173/174/175 Setpoint n21/22/23 scales PI controller [0… 100 %] step width: 0.1 %

  Operation with optional second analog input (e.g., FIO1B)

  The setpoint from the AI2 analog input applies as long as no setpoint is selected. The FBG setpoint control module can be added to AI1 or a fixed setpoint using P121.
- **RS 485 / Fixed setpoint**
- **SBus 1** / **Fixed setpoint:** Specify the setpoint and set it using the following bus parameters:

  P870/871/872 Setpoint description PO1/PO2/PO3 [PI controller setpoint [%]]

  PO1/PO2/PO3 = 0 – 2^{14} = 0 ... 100 % PI controller setpoint

  Setpoint selection is **always unipolar**. The inverter restricts negative setpoints (e.g. via RS-485 or SBus) to zero.
- **For all setpoint sources:** The FBG setpoint control module can be added to the setpoint or a fixed setpoint using P121.
- The following settings do not have any effect: **Bipolar / Fixed setpoint, Motor potentiometer / Fixed setpoint** as well as **Fixed setpoint + AI1** and **Fixed setpoint *AI1**. If you set these, the inverter always specifies the setpoint zero.

6.19.3 Actual value detection

The unipolar input AI1 is the actual value input.

You can set the operating mode for the actual value using *P112 AI1 operating mode* (see also parameter 116 … 119):

- **0 ... 10 V**: The following applies to operation as a voltage input:
  0 ... 10 V = 0 ... 100 % PI controller actual value
- 0 ... 20 mA: The following applies to operation as a current input:
  0 ... 20 mA = 0 ... 100 % PI controller actual value
- 4 ... 20 mA: The following applies to operation as a current input:
  4 ... 20 mA = 0 ... 100 % PI controller actual value

You can scale the actual value detected with P253 PI actual value mode with a factor between 0 and 10.

P254	PI actual value scaling	0.1 ... **1** ... 10	Step width:	0.01

This parameter allows you to assign an offset subsequently to the scaled actual value.

P255	PI actual value offset	**0** ... 100 [%]	Step width:	0.1 %

The scaled value with its offset is the actual value for the PI controller.

You can read the actual value via RS-485 or SBus using the following bus parameters:

P873 Actual value description PI1 [PI controller [%]]
P874 Actual value description PI2 [PI controller [%]]
P875 Actual value description PI3 [PI controller [%]]

PE1 = 0…2^{14} = 0…100 % PI-controller setpoint
PE2 = 0…2^{14} = 0…100 % PI-controller setpoint
PE3 = 0…2^{14} = 0…100 % PI-controller setpoint

6.19.4 Reference message

With this parameter, you can program a reference message with regard to the actual value of the PI controller. By doing this, you can monitor the actual value for violation of a limit value.

P450	PI actual value reference	**0** ... 100 [%]	Step width:	0.1 %
P451	Signal = "1" if:	PI actual value < PI reference PI actual value > PI reference		

You have to program a binary output terminal to "PI controller actual value reference" to issue the reference signal. The reference signal operates with a hysteresis of 5 %. The reference signal does not have a delay time and signals "1" depending on P451.

You must program the binary output DO01 P620, DO02 P621 or DO03 P622 to PI controller actual value reference.

6.19.5 Inverter control

You can determine the direction of rotation by using the terminals for the direction of rotation "CW/Stop" and "CCW/Stop".

Upon enable, the inverter increases the speed up to P301 Minimum speed using the P130 Speed ramp. PI control becomes active once the minimum speed is reached. The PI controller correcting variable directly determines the speed setpoint.

If you revoke the CW/CCW terminal, the inverter deactivates PI control and stores the I-component of the PI controller. The speed decreases using the speed ramp (P131). If you enable the inverter before the drive has reached its stop speed, the PI controller becomes active again with the current setpoint.

If you stop the inverter with the "Enable/Stop" terminal, the drive decelerates with the stop ramp. The inverter stores the I-component of the controller.

With setpoint source RS485 or SBUS, the value of the PO data item determines the direction of rotation. "PI CONTROLLER %" and the value of the PO data item "PI CONTROLLER %" act as a setpoint for the PI controller.

6.20 Application examples

All application examples presented here assume that the unit has been started up correctly in accordance with the "Startup" section.

6.20.1 External setpoint potentiometer

The external setpoint potentiometer is not effective when manual operation is active.

Connect an external setpoint potentiometer as follows:

The resistance value of the external setpoint potentiometer R must be ≥ 10 kΩ.

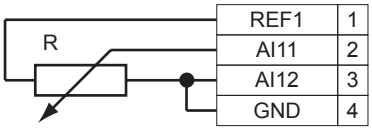

X10:

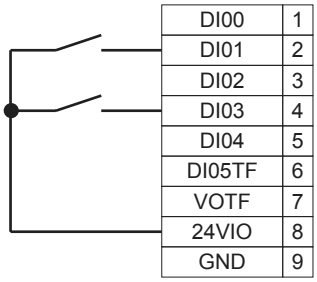

X12:

6.20.2 Speed-controlled agitator

In this application, you can control the speed with the FBG speed control module.

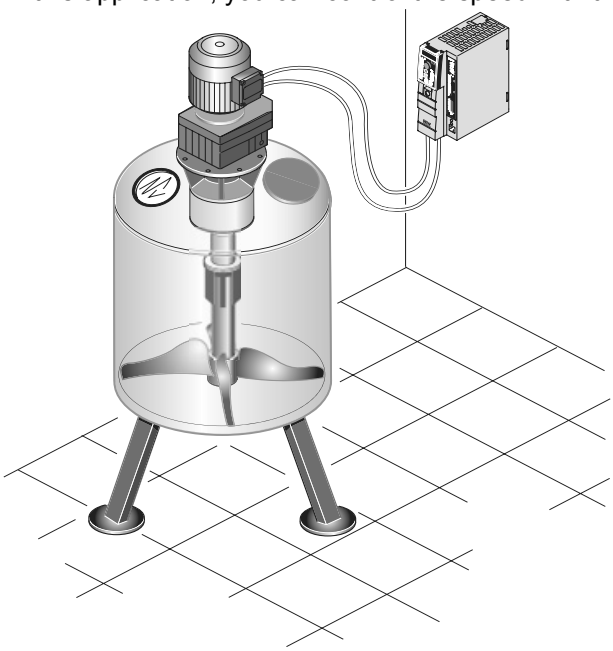

You use the keypad to control reset, start, stop and speed. Select the "FBG speed control module" icon to operate the agitator.

Parameter

Adapt the following parameters for the agitator:

- P122 FBG manual operation: Direction of Rotation
- Ramp t11 up (adjust with keypad or parameter P130)
- Ramp t11 up (adjust via keypad icon or parameter P131)
- P301 minimum speed
- P302 maximum speed
- P860 PWM frequency

6.20.3 Positioning a trolley

Principle

Positioning a trolley with rapid speed and creep speed, and position detection using proximity sensors.

The emergency off function must be guaranteed using a separate safety circuit.

Install a braking resistor.

Perform a startup for the VFC operating mode.

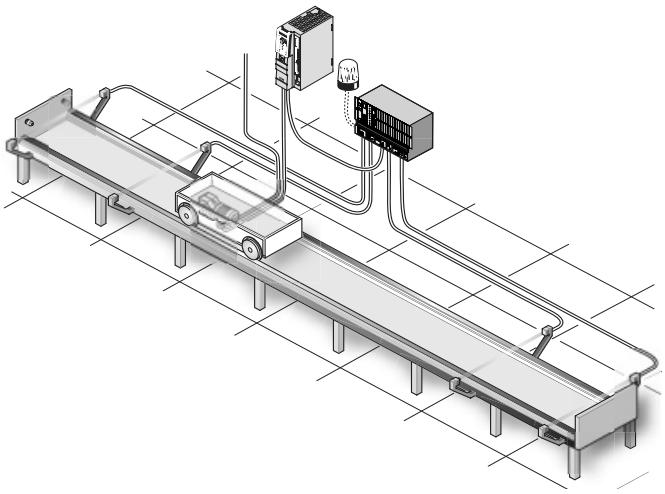

Terminals

- Rapid speed: DI04 = 1 and DI05 = 1
- Creep speed: DI04 = 1 and DI05 = 0

Assign the electronics terminal strip with

- DI01 = CW/stop
- DI02 = CCW/Stop
- DI03 = Enable
- DO01-C and DO01-NO = "Fault"
- DO02 = brake

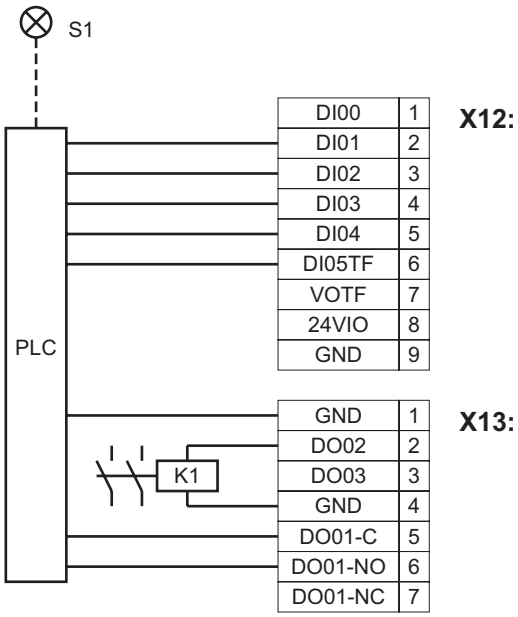

K1 is the brake contactor, S1 the fault indicator light.

The following signals between the machine controller PLC and MOVITRAC® B are important:

X12:2: Clockwise direction of rotation	X12:6: Creep speed/rapid speed
X12:3: Counterclockwise direction of rotation	X12:8: 24 V
X12:4: Start/Stop	X13:6: No fault
X12:5: Rapid speed	X13:2: Brake released

Parameter

The following parameters are relevant for this application. Check whether you can leave all factory setting values unchanged.

P601 Binary input DI02: CCW/Stop	P604 Binary input DI05: n12/n22
P602 Binary input DI03: Enable	P620 Binary output DO01: Problem
P603 Binary input DI04: n11/n21	P621 Binary output DO02: Brake released

6.20.4 PI controller

This represents the basic structure of the control system with a PI controller, taking the example of a pressure control system.

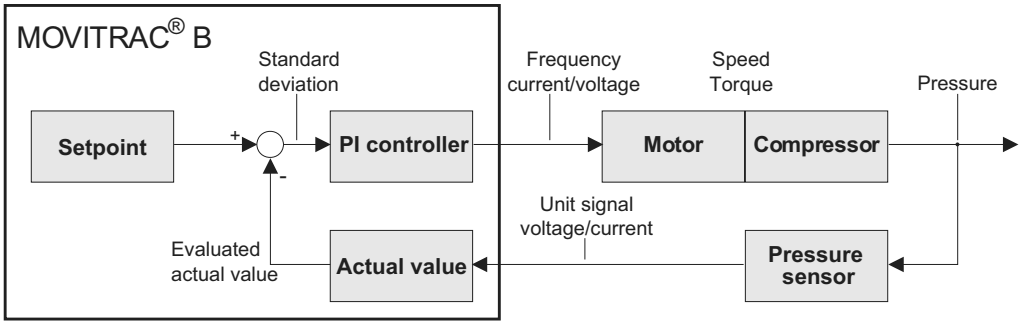

7 Unit Design

7.1 Sizes 0XS / 0S / 0L

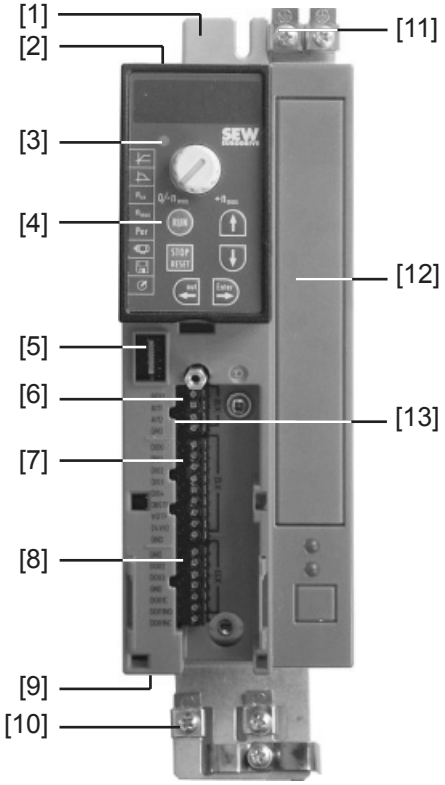

[1] Fixing strap
[2] X1: Power supply connection:
3-phase: L1 / L2 / L3
1-phase: L / N
[3] Status LED (visible without optional keypad)
[4] Optional keypad
[5] Connection for optional communication / analog module
[6] X10: Analog input
[7] X12: Binary inputs
[8] X13: Binary outputs
[9] X2: Motor connection U / V / W / Brake connection +R / –R
[10] Shield clamp, fixing strap below
[11] PE connection
[12] Option card slot (cannot be retrofitted / not for BG0XS)
[13] Switch S11 for V-mA toggle analog input
(in sizes 0XS and 0S behind removable connector)

7.2 Sizes 1 / 2S / 2

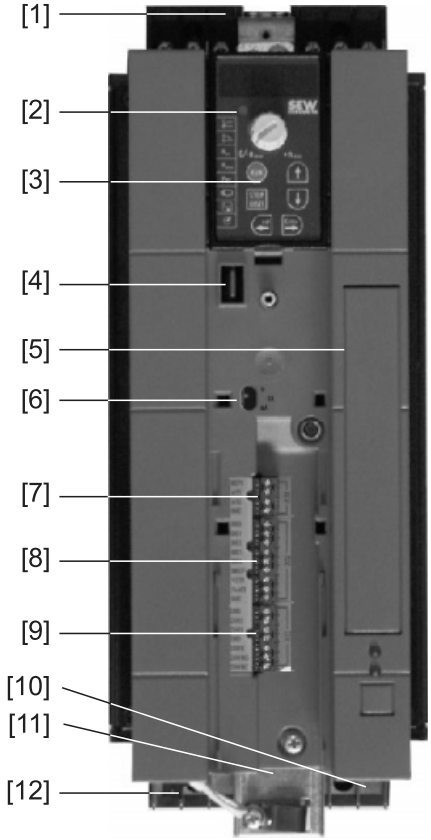

[1] X1: Power supply connection 3-phase: L1 / L2 / L3 / PE screw
[2] Status LED (visible without optional keypad)
[3] Optional keypad
[4] Connection for optional communication / analog module
[5] Option card slot
[6] Switch S11 for V-mA toggle analog input
[7] X10: Analog input
[8] X12: Binary inputs
[9] X13: Binary outputs
[10] X2: Motor connection U / V / W / PE screw
[11] Space for power shield clamp
[12] X3: Braking resistor connection R+ / R– / PE

7.3 Size 3

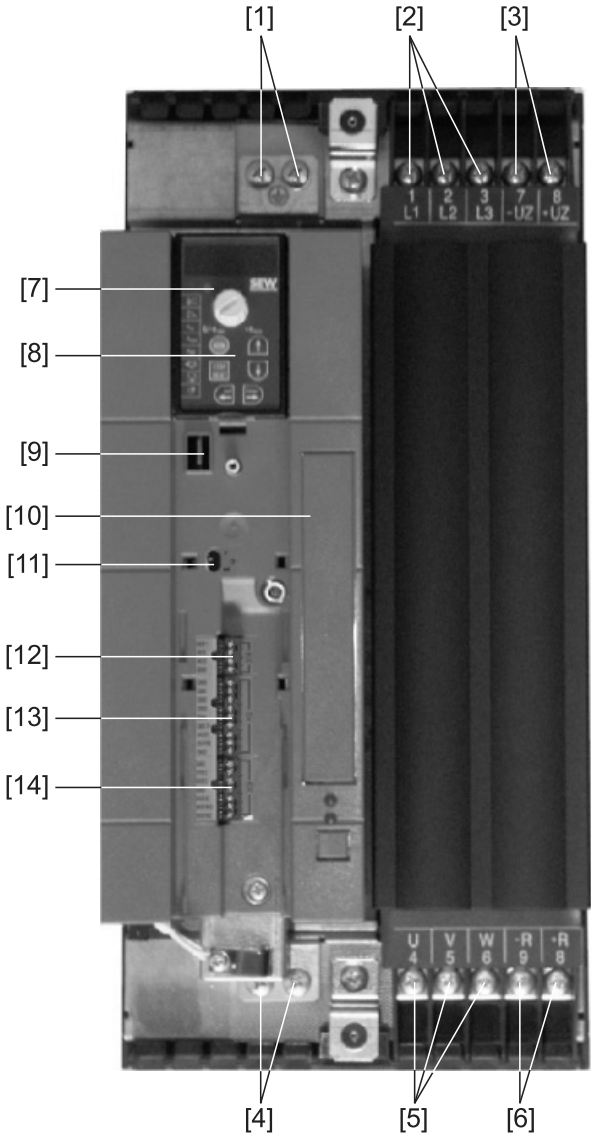

[1] X2: PE connection
[2] X1: Power supply connection 3-phase: 1/L1 / 2/L2 / 3/L3
[3] X4: DC link connection
[4] X2: PE connection
[5] X2: Motor connection U (4) / V (5) / W (6)
[6] X3: Braking resistor connection R+ (8) / R– (9) and PE connection
[7] Status LED (visible without optional keypad)
[8] Optional keypad
[9] Connection for optional communication / analog module
[10] Option card slot
[11] Switch S11 for V-mA toggle analog input
[12] X10: Analog input
[13] X12: Binary inputs
[14] X13: Binary outputs

7.4 Sizes 4 / 5

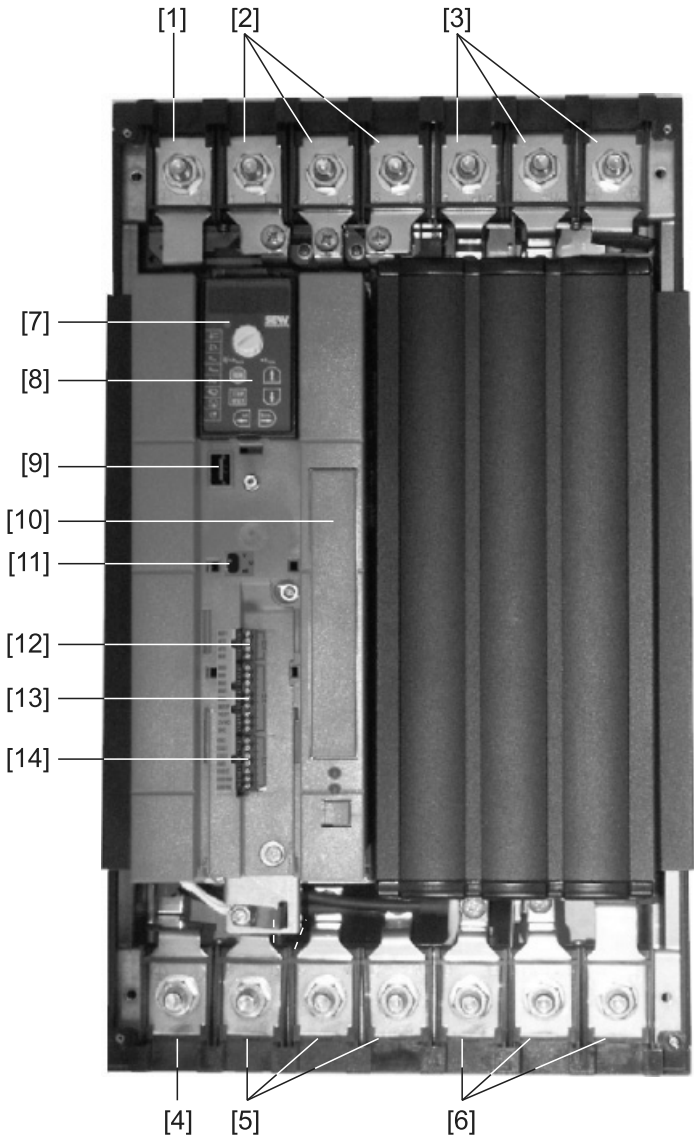

[1] X2: PE connection
[2] X1: Power supply connection 3-phase: 1/L1 / 2/L2 / 3/L3
[3] X4: DC link connection
[4] X2: PE connection
[5] X2: Motor connection U (4) / V (5) / W (6)
[6] X3: Braking resistor connection R+ (8) / R– (9) and PE connection
[7] Status LED (visible without optional keypad)
[8] Optional keypad
[9] Connection for optional communication / analog module
[10] Option card slot
[11] Switch S11 for V-mA toggle analog input
[12] X10: Analog input
[13] X12: Binary inputs
[14] X13: Binary outputs

7.5 Unit designation / Nameplate

MC 07 B 0004- 2 B 1- 4- 00

Version	00 = Standard
Quadrants	4 = 4Q (with brake chopper)
Connection type	3 = 3-phase / 1 = 1-phase
Radio interference suppression	0 = No radio interference suppression A = Radio interference suppression C2 / A B = Radio interference suppression C1 / B
Connection voltage	2 = AC 200 ... 240 V 5 = AC 380 ... 500 V
Recommended motor power	0022 = 2.2 kW (3.0 HP)
Version B	
Series and generation	
Type MOVITRAC®	

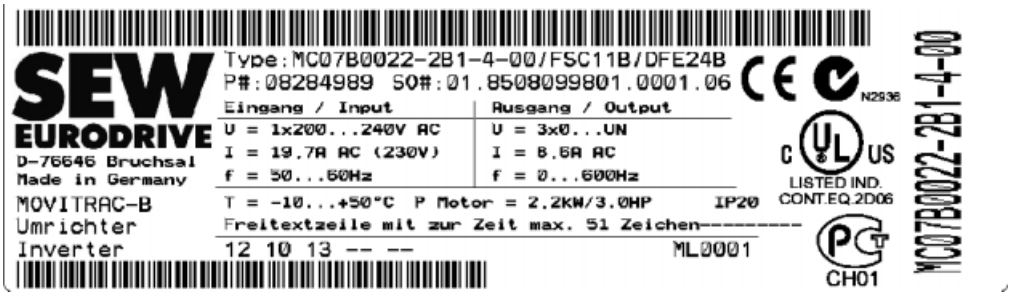

The unit status is above the lower barcode.

8 Installation

8.1 Installation notes

	NOTE
	Comply with the safety notes during installation.

Recommended tools	• Use a screwdriver with a 2.5 mm (0.098 in) wide blade for connecting the electronics terminal strip X10 / X12 / X13.
Minimum clearance and mounting position	• Leave **100 mm (4 in) clearance at the top and bottom** for optimum cooling. There is no need for clearance at the sides. You can line up the units directly next to one another. Make sure that the circulation of air is not disrupted by cables or other installation materials. Prevent the heated exhaust air from other units from blowing onto this unit. **Install the units vertically only.** You must not install them horizontally, tilted or upside down. • Proper heat dissipation of the rear side of the heat sink improves the thermal utilization of the unit.
Separate cable ducts	• Lead power cables and electronics cables in separate cable ducts.
EMC-compliant installation	• All cables except for the power supply cable **must be shielded**. As an alternative to the shielding, the option HD.. (output choke) can be used for the motor cable to achieve the emitted interference limit values. • When using shielded motor cables, e.g. prefabricated motor cables from SEW-EURODRIVE, you must **keep the unshielded conductors between the shield and connection terminal of the inverter as short as possible**. 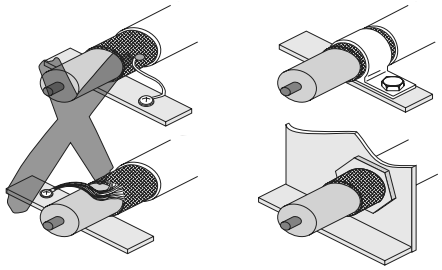 • Connect the **shield by the shortest possible route and make sure it is grounded over a wide area at both ends**. If using double-shielded cables, ground the outer shield on the inverter end and the inner shield at the other end. • You can also use **grounded sheet-metal ducts or metal pipes** for **shielding** the cables. **Install** the **power and control cables separately**. • Provide **high frequency compatible grounding** for the **inverter** and **all additional units** (wide area metal-on-metal contact between the unit housing and ground, e.g., unpainted control cabinet mounting panel).
IT systems	• SEW recommends using **earth-leakage monitors with pulse code measuring** in network systems with a non-earthed star point **(IT systems)**. Use of such devices prevents the earth-leakage monitor mis-tripping due to the earth capacitance of the inverter. • For size 0, SEW recommends deactivating the interference suppressor filter using the enclosed insulation discs (see "Deactivating EMC capacitors (size 0 only)").
Contactor	• Only use contactors in utilization category AC-3 (EN 60947-4-1).
Cross-sections	• Supply system lead: **Cross-section according to rated input current** I_{Mains} at rated load. Motor cable: **Cross-section according to rated output current** I_{Rated}. Electronics cables: Maximum 1.5 mm^2 (AWG16) without conductor end sleeves[1)] Maximum 1.0 mm^2 (AWG17) with conductor end sleeves
Cable lengths for individual drives	The cable lengths depend on the PWM frequency. The permitted motor cable lengths are listed in the "Project Planning" section of the MOVITRAC® B system manual.
Unit output	• Only connect an **ohmic/inductive load (motor)**; do not connect a capacitive load!

Braking resistor connection	• Cut the cables to the required length. • Use **2 tightly twisted leads or a 2-core shielded power cable**. Cross-section according to the rated output current of the inverter. • Protect the braking resistor with a **bimetallic relay** with trip class 10 or 10A (wiring diagram). Set the **trip current** according to the **technical data of the braking resistor**. • For braking resistors in the **BW..-T** series, you can connect the **integrated thermostat using a 2-core, shielded cable** as an **alternative** to a bimetallic relay. • The **flat-design braking resistors** have internal thermal overload protection (fuse cannot be replaced). Install the **flat-design braking resistors** together with the appropriate **touch guard**.
Braking resistor operation	• The supply cables to the braking resistors carry a high voltage (approx. DC 900 V) during rated operation. • The surfaces of the braking resistors get very hot when the braking resistors are loaded with P_{Rated}. Choose a suitable installation location. Braking resistors are usually mounted on the switch cabinet roof.
Binary inputs / binary outputs	• The **binary inputs** are electrically isolated by **opto-couplers**. • The **binary outputs** are **short-circuit proof** and **protected against external voltages up to 30 V** (exception: relay output DOØ1). External voltage can destroy the binary outputs.
Interference emission	• Use shielded motor cables or HD output chokes for EMC compliant installation.
Switched inductances	• Use suppressors to suppress interference on contactors, relays, solenoid valves, etc. • The minimum distance to the inverter must be 150 mm (5.91 in).
Line filter	MOVITRAC® B frequency inverters have an integrated line filter as standard. They comply with the following limit value class according to EN 55011 on the mains side without further measures: • 1-phase connection: **C1 / B** cable conducted • 3-phase connection: **C2 / A** No EMC limits are specified for interference emission in voltage supply systems without a grounded star point (IT systems). The efficiency of line filters is severely limited.
Analog setpoint	Use a potentiometer with R ≥ 10 kΩ for the analog setpoint input.

1) Fine wired cables may not be installed without conductor end sleeves.

8.1.1 Line protection and earth-leakage circuit breaker

- Install **fuses at the beginning of the mains cable** behind supply bus junction (→ Basic unit connection diagram).
- SEW-EURODRIVE recommends that you do not use earth-leakage circuit breakers. However, if an earth-leakage circuit breaker is stipulated for direct or indirect protection against contact, **observe the following note in accordance with EN 61800-5-1**:

⚠ WARNING

Wrong type of earth-leakage circuit breaker installed.

Severe or fatal injuries.

MOVITRAC® can cause direct current in the protective earth. In cases where an earth-leakage circuit breaker (FI) is used for protection against direct or indirect contact, **only an earth-leakage circuit breaker (FI) of type B on the external power supply side of the MOVITRAC® is permitted**.

8.1.2 PE mains connection (→ EN 61800-5-1)

Earth-leakage currents ≥ 3.5 mA may occur during normal operation. To meet the requirements of EN 61800-5-1 observe the following:

- **Supply system lead < 10 mm² (0.016 in²)**: Route a **second PE conductor with the cross section of the supply system lead** in parallel to the protective earth via separate terminals or use a **copper protective earth conductor with a cross-section of 10 mm² (0.016 in²)**.
- **Supply system lead 10 mm² … 16 mm² (0.016 in² ... 0.025 in²)**: Route a **copper protective earth with the same cross-section as the supply system lead**.
- **Supply system lead 16 mm² … 35 mm² (0.025 in² ... 0.054 in²)**: Route a **copper protective earth with a cross-section of 16 mm² (0.025 in²)**.
- **Supply system lead > 35 mm² (0.054 in²)**: Route a **copper protective earth with half the cross-section of the supply system lead**.

8.2 Installation of the optional power components

When **more than five 3-phase units** or **more than one 1-phase unit** are connected to a **supply system contactor** designed for the total current: **Insert a line choke** in the circuit to limit the inrush current.

8.2.1 ND...series line chokes

ND ... series line choke connection

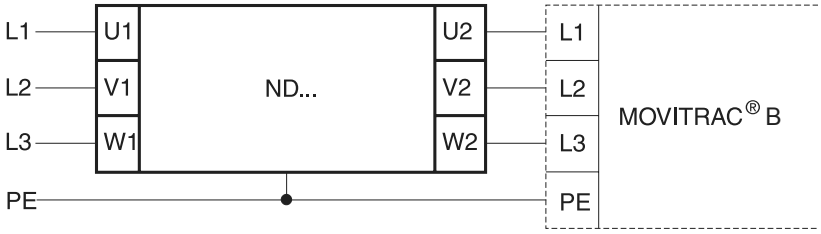

8.2.2 NF...series line filter

- The NF.. line filter can be used to maintain the limit value class C1/B for MOVITRAC® B units sizes 0 to 4.

STOP	**STOP**
	Possible damage to property Do not switch between the line filter and MOVITRAC®. • Consequences if disregarded: Damage to the input level.

- Install the **line filterclose to the inverter** but outside the minimum clearance for cooling.
- Keep the **length of the cable between the line filter and inverter to an absolute minimum**, and never more than 400 mm (15.7 in). Unshielded, twisted cables are sufficient. Also use unshielded cables as the supply system lead.

Connecting NF...-... line filters

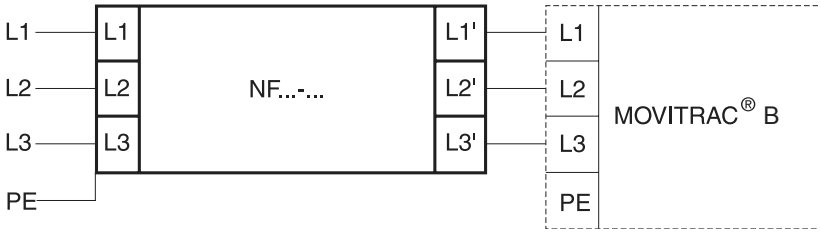

8.2.3 Flat ferrites ULF11A

Place the supply system cable (L and N) in the flat ferrite and press the flat ferrite together until they snap in place.

Compliance with EMC limit class C1 / B has been tested on a specified test setup. Compliance with class C1 / B for signal interference is achieved by the proper installation of the flat ferrites ULF11A.

8.2.4 HF...series output filters

	NOTE
	• Install output filters next to the corresponding inverter. Leave a ventilation space of at least 100 mm (4 in) below and above the output filter. No clearance is required on the sides.

- Limit the connection cable between the inverter and output filter to the absolute minimum length required. Maximum 1 m (3.3 ft) with unshielded cable, 10 m (33 ft) with shielded cable.
- Several motors can be connected to one output filter when operating a motor group from one inverter. The total value of the rated motor currents must not exceed the rated throughput current of the output filter.
- 2 identical output filters can be connected in parallel to one inverter output to double the rated throughput current. To do this, connect all like connections to the output filters in parallel.
- Output filter connection V5 (with HF...-503) or 7 (with HF...-403) must not be connected when the inverter is operated with f_{PWM} = 4 or 8 kHz.

HF output filter connection without V_{DC} link connection (PWM frequency only 4 or 8 kHz)

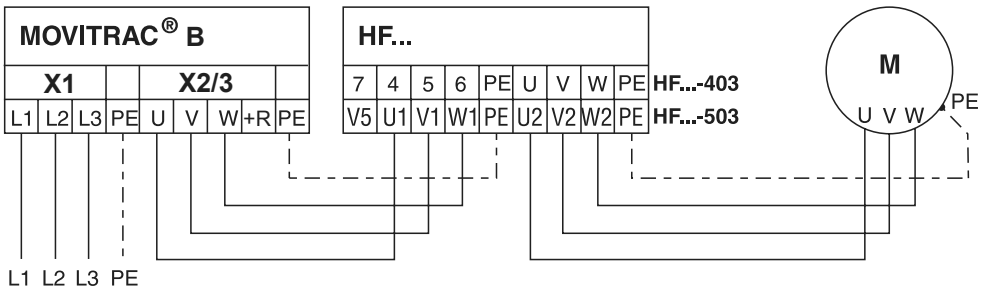

HF output filter connection with V_{DC} link connection (PWM frequency only 12 or 16 kHz)

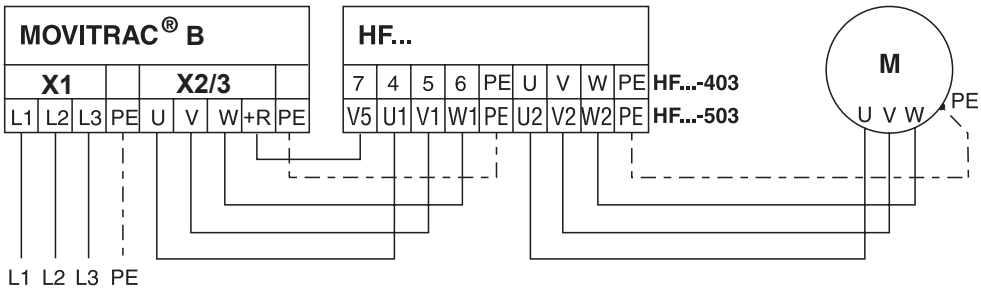

8.2.5 HD output choke

- Install the output choke close to MOVITRAC® B **beyond the minimum clearance**.
- Always route all 3 phases (**not PE!**) through the output choke.
- If the cable is shielded, the shield should **not** be routed through the output choke.

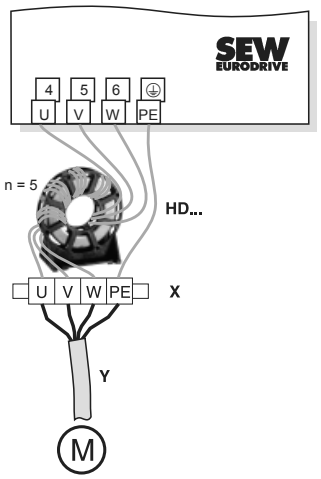

In the case of the **HD** output choke, the cable must be wrapped around the choke **5 times**.

Only 5 loops are possible if the cable has a large diameter. To make up for this, 2 or 3 output chokes should be connected in series. SEW recommends connecting in series 2 output chokes in case of 4 windings and 3 output chokes in case of 3 windings.

- Installation of HD012 output choke:

  Install output choke under the corresponding inverter. Leave a ventilation space of at least 100 mm (4 in) below and above the output choke. Provide a clearance of 10 mm (0.39 in) on each side.

  Three alternative connection options are given for connecting the protective earth. The PE line of the motor cable can be connected directly to the frequency inverter.

8.3 UL compliant installation

Please note the following points for UL compliant installation:

- Use only copper cables with the following temperature ranges as connection cables:
  - MOVITRAC® B 0003 ... 0300: Temperature range 60/75 °C (140/167 °F)
  - MOVITRAC® B 0370 and 0450: Temperature range 75 °C (167 °F)
- Necessary tightening torques for MOVITRAC® B power terminals: See installation notes.
- Operation of inverters on supply systems with a maximum phase-to-earth voltage of AC 300 V only.
- The inverter can only be operated on IT systems if the phase-to-earth voltage of AC 300 V cannot be exceeded either during operation or in case of an error.
- The MOVITRAC® B frequency inverter is only allowed to be operated on supply systems which can supply maximum values in accordance with the following table. Only use melting fuses. The performance data of the fuses must not exceed the values in the following table.

8.3.1 Maximum values / fuses

The following maximum values / fuses must be observed for UL compliant installation:

230 V units	Max. supply current	Max. supply voltage	Fuses
0003 / 0004 / 0005 / 0008	AC 5000 A	AC 240 V	15 A / 250 V
0011 / 0015 / 0022	AC 5000 A	AC 240 V	30 A / 250 V

400/500 V units	Max. supply current	Max. supply voltage	Fuses
0003 / 0004 / 0005 / 0008 / 0011 / 0015	AC 5000 A	AC 500 V	15 A / 600 V
0022 / 0030 / 0040	AC 5000 A	AC 500 V	20 A / 600 V
0055 / 0075	AC 5000 A	AC 500 V	60 A / 600 V
0110	AC 5000 A	AC 500 V	110 A / 600 V
0150 / 0220	AC 5000 A	AC 500 V	175 A / 600 V
0300	AC 5000 A	AC 500 V	225 A / 600 V
0370 / 0450	AC 10000 A	AC 500 V	350 A / 600 V
0550 / 0750	AC 10000 A	AC 500 V	500 A / 600 V

NOTES

- Only use tested units with a **limited output voltage** (V_{max} = DC 30 V) and **limited output current** (I ≤ 8 A) as an **external DC 24 V voltage source**.
- **UL certification does not apply to operation in voltage supply systems with a non-grounded star point (IT systems).**

8.4 Scope of delivery and installation of loose items

8.4.1 Scope of delivery, included loose

A loose bag is included in the scope of delivery. The size of the bag depends on the size of the inverter.

<table>
<tr><th colspan="6">Scope of delivery of loose items for size</th></tr>
<tr><th>0XS / 0S / 0L</th><th>1</th><th>2S</th><th>2</th><th>3</th><th>4 / 5</th></tr>
<tr><td colspan="6">• Shield plate for control electronics with clamps and screws [1]
• 3 connectors for electronics terminals [2]</td></tr>
<tr><td colspan="4">• Grounding terminals with screws [4]</td><td>–</td><td>–</td></tr>
<tr><td rowspan="2">• Shield plate for the power section with clamps and screws [3]
• Connector for mains (2 or 3-pole) and motor [5]
• Plastic insulations with stickers [6]</td><td>• Shield plate for the power section without screws</td><td colspan="2">• Touch guard
• Shield plate for the power section with screws</td><td>–</td><td>–</td></tr>
<tr><td colspan="2">• Fixing straps</td><td>–</td><td>–</td><td>• Touch guard</td></tr>
</table>

Loose items for size 0:

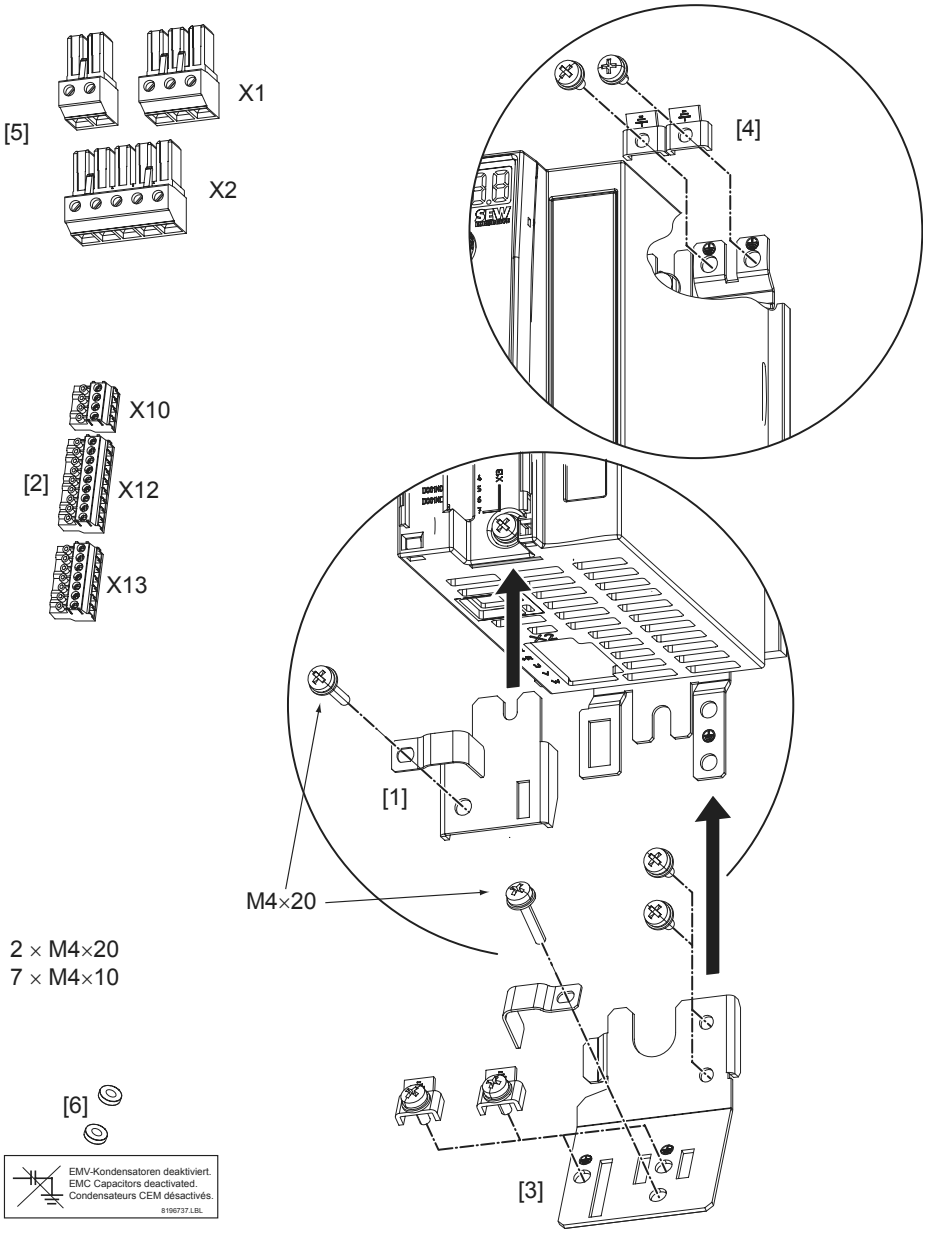

8.4.2 Installation of shield plate for control electronics (all sizes)

MOVITRAC® B includes a shield plate for control electronics with a retaining screw as standard. Install the shield plate for control electronics as follows:

1. Loosen the screw first [1].
2. Install the shield clamp through the slot in the plastic housing.
3. Fasten the shield clamp.

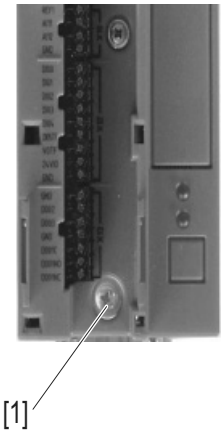

8.4.3 Installation of shield plate for the power section

Size 0

A power shield plate for the power section with 2 retaining screws is supplied as standard with MOVITRAC® B size 0. Mount the shield plate for the power section with the two retaining screws.

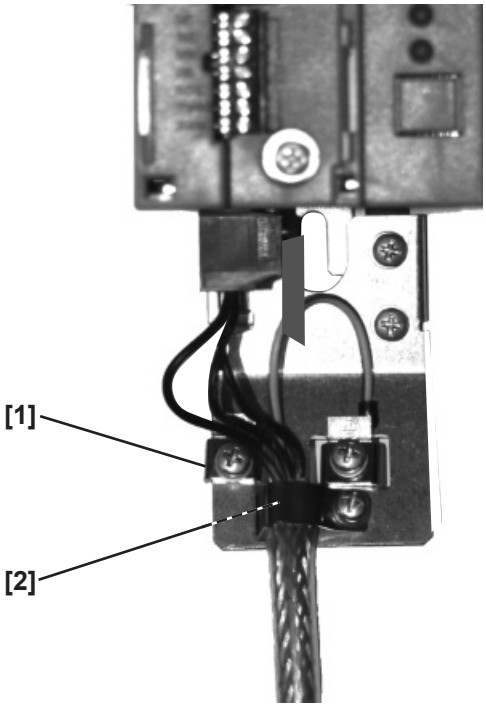

[1] PE connection [2] Shield plate

Size 1

SEW-EURODRIVE supplies a shield plate for the power section as standard with MOVITRAC® B size 1. Mount the shield plate for the power section with the unit's two retaining screws.

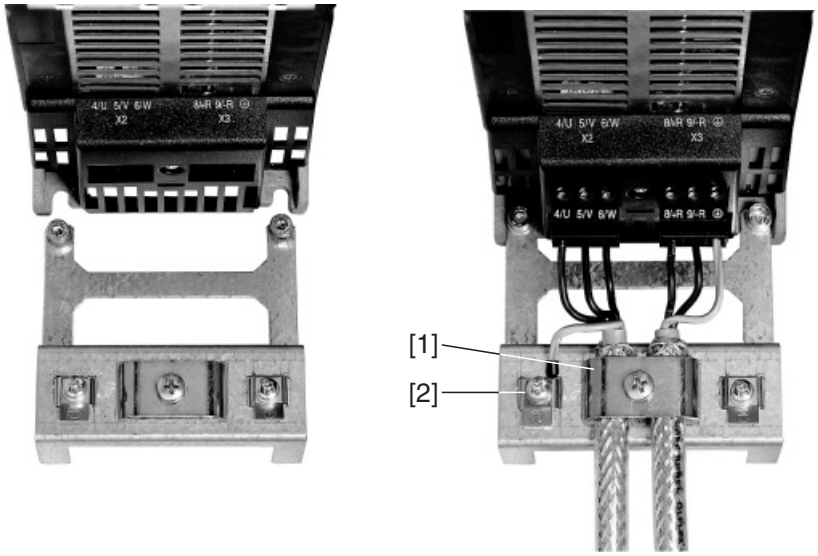

[1] Shield clamp [2] PE connection

Sizes 2S / 2

SEW-EURODRIVE supplies a shield plate for the power section with two retaining screws as standard with MOVITRAC® sizes 2S / 2. Mount the shield plate for the power section with the two retaining screws. The illustration shows size 2.

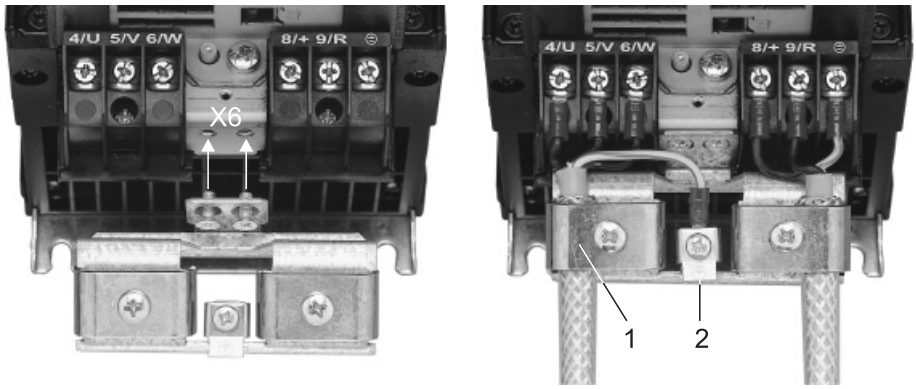

[1] Shield clamp [2] PE connection

The shield plate for the power section provides you with a very convenient way of installing the shield for the motor and brake cables. Apply the shield and PE conductor as shown in the illustrations.

Sizes 3 ... 5

No shield plates for the power section are supplied with MOVITRAC® B sizes 3 and 4. Use commercially available shield clamps for installing the shielding of motor and brake cables. Apply the shield as closely as possible to the inverter.

8.4.4 Touch guard installation

⚠ HAZARD

Uncovered power connections.

Severe or fatal injuries from electric shock.

- Install the touch guard according to the regulations.
- Never start the unit if the touch guard is not installed.

Size 2S

SEW-EURODRIVE supplies two touch guards for the DC link and braking resistor terminals as standard with MOVITRAC® B size 2S. Without touch guard, MOVITRAC® B size 2S has enclosure IP10. When the touch guard is installed, the unit has enclosure IP20.

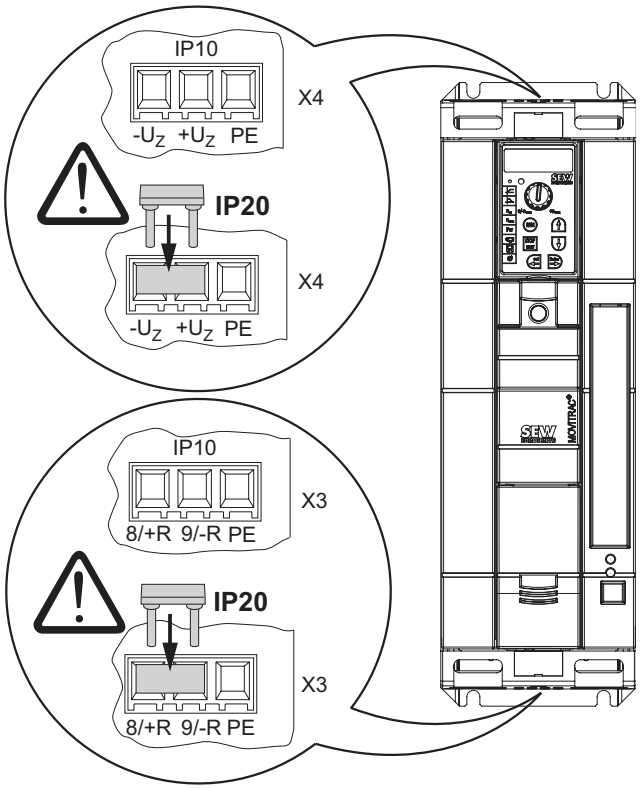

Sizes 4 / 5

Two touch guards with 8 retaining screws are supplied as standard with MOVITRAC® B sizes 4 / 5. Install the touch guard on both covers of the power section terminals.

Touch guard for MOVITRAC® B sizes 4 / 5:

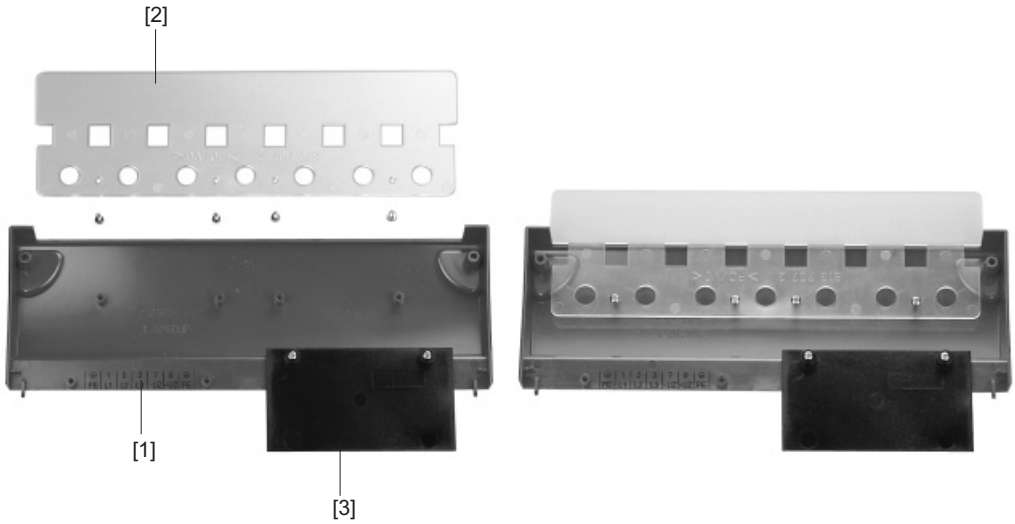

The touch guard comprises the following parts:

[1] Cover

[2] Connection plate

[3] Screen (only for size 4)

The MOVITRAC® B units sizes 4 / 5 can only achieve enclosure IP10 when the following conditions are met:

- Touch guard is fully installed
- The shrink tubing is installed on all power terminals (X1, X2, X3, X4)

	NOTE
	If the above conditions are not met, MOVITRAC® units sizes 4 and 5 have enclosure IP00.

8.5 Cold plate installation

The dissipation of the frequency inverter power loss can take place via coolers that work with different cooling media (air, water, oil, etc.). This can be useful, for example, in restricted installation spaces. When heeding the usual installation notes (40 °C/100 mm [104 °F/4 in] space above and below), cold-plate technology is not necessary.

A good thermal connection to the cooler is important for safe operation of the frequency inverters:

- The contact area between cooler and frequency inverter has to be the size of the frequency inverter cooling plate.
- Level contact surface, deviation max. up to 0.05 mm (0.002 in).
- Connect cooler and cooling plate with all necessary screw connections.
- The mounting plate must not exceed 70 °C (158 °F) during operation. This limit must be ensured by the cooling medium.
- Cold plate installation is not possible with FHS or FKB.

8.6 Deactivating EMC capacitors (size 0 only)

Only electricians can convert the unit. Once converted, the unit must be marked with the sticker provided in the accessory bag.

Proceed as follows to deactivate the EMC capacitors for MOVITRAC® B:

	NOTES
	• Disconnect the inverter from the power. Switch off the DC 24 V and the supply voltage. • Take appropriate measures to avoid electrostatic charges (use discharge strap, conductive shoes, etc.) before removing the cover. • Touch only the unit frame and heat sink. Do not touch any electronic components.

1. Open the unit:
   - Remove **all** connectors.
   - Remove the electronics shield clamp.
   - Remove the housing retaining screw in the center of the housing front.
   - Remove the housing.
2. Remove the two screws [A] securing the circuit board.
3. Install the screws in the plastic insulations provided [B].
4. Fasten screws to the unit [C].
5. Close the unit.
6. Attach the sticker provided to the unit.

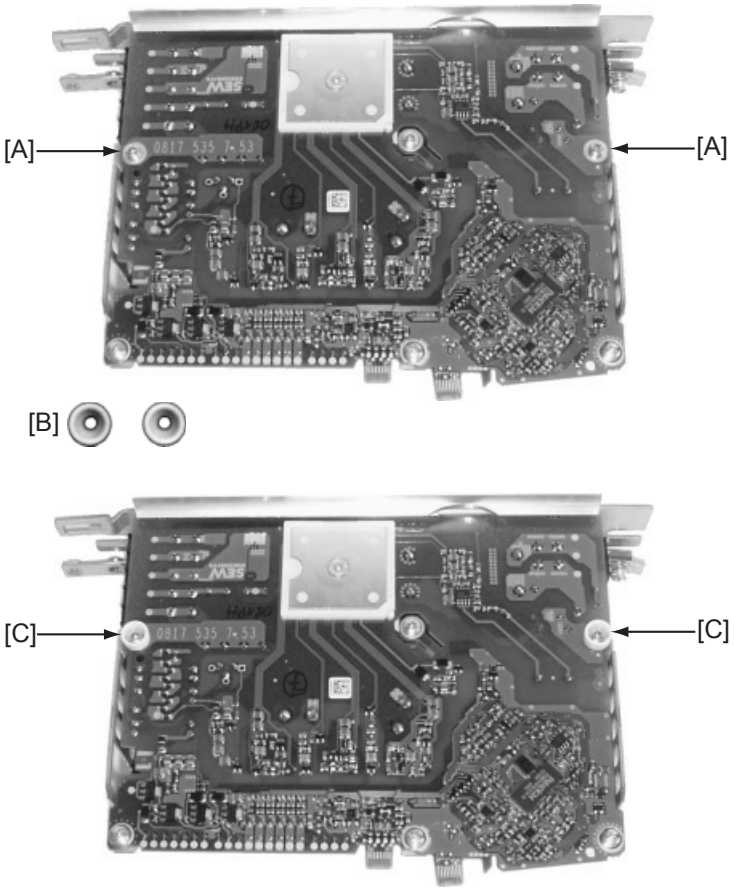

Deactivating the EMC capacitors stops earth-leakage currents from flowing over the EMC capacitors.

- Please ensure that the earth-leakage currents are essentially only determined by the level of the DC link voltage, the PWM frequency, the applied motor cable and its length and the motor used.

When the suppression capacitors are deactivated, the EMC filter is no longer active.

	NOTE
	IT systems • No EMC limits are specified for interference emission in voltage supply systems without a grounded star point (IT systems).

8.7 Wiring diagram 230 V 0.25 … 2.2 kW (0.34 ... 3.0 HP) / 400 V 0.25 … 4.0 kW (0.34 ... 5.4 HP)

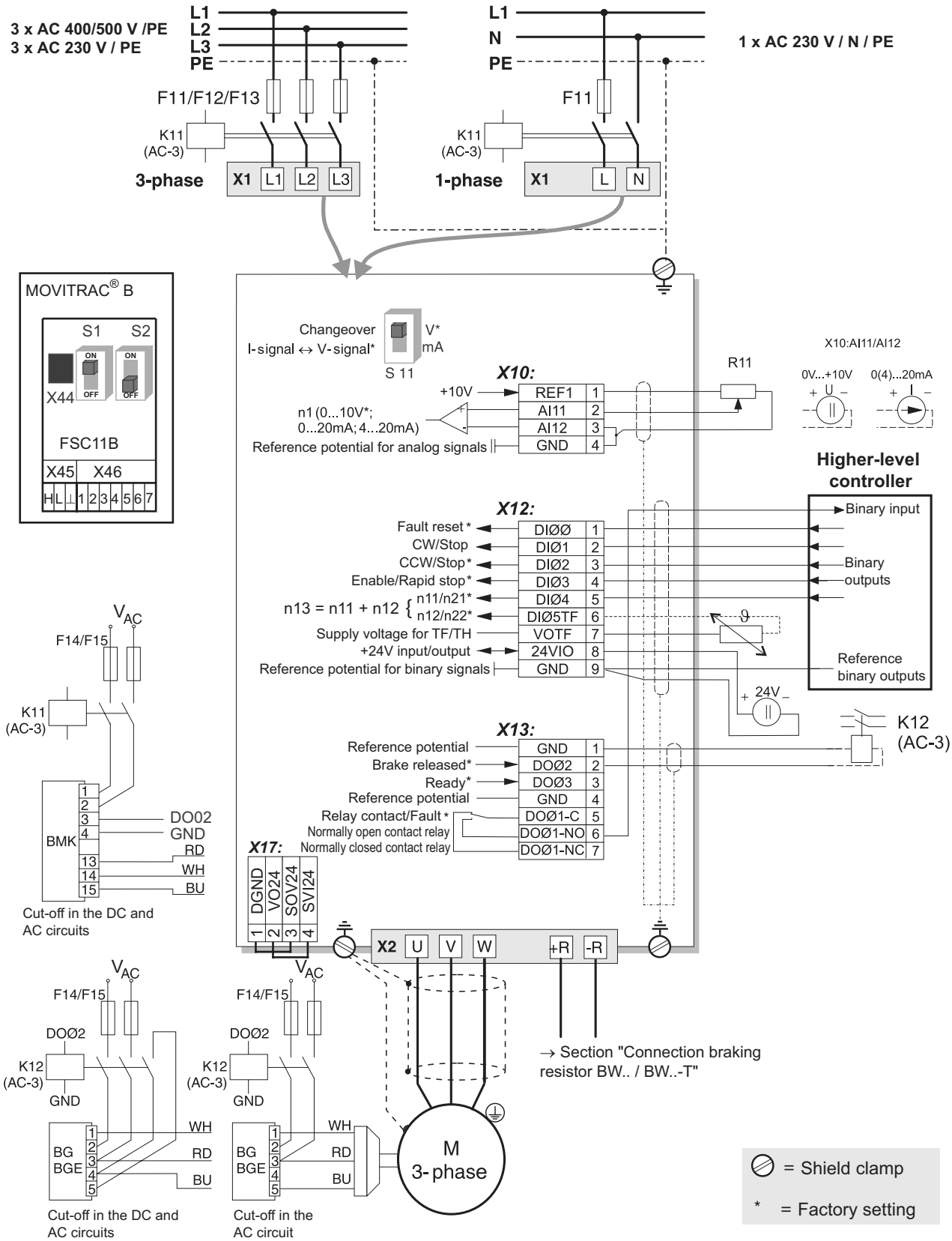

8.8 Wiring diagram 230 V 3.7 … 30 kW (5.0 ... 40 HP) / 400 V 5.5 … 75 kW (7.4 ... 100 HP)

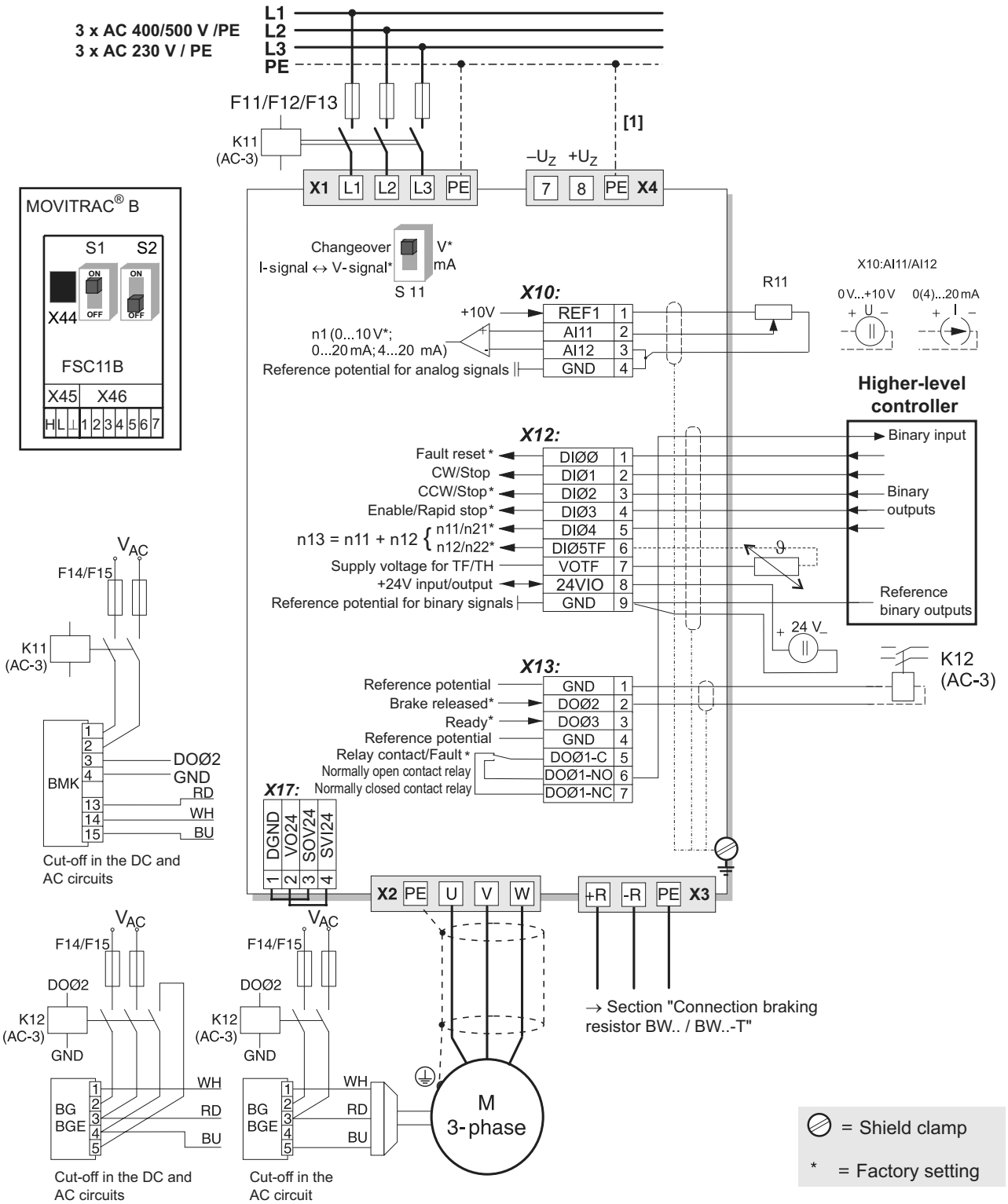

[1] With sizes 1, 2S, and 2, there is no PE connection next to the power supply connection terminals and motor connection terminals [X1]/[X2]. In this case, use the PE terminal next to the DC link connection [X4].

From size 3 onwards, there are two additional PE terminals.

8.9 TF thermistor and TH bimetallic switch

The winding temperature is monitored using TF thermistors or TH bimetallic switches. The connection is made at the TF output VOTF and the TF input DI05TF of MOVITRAC®. The binary input DI05TF must be set to TF message. The temperature is then monitored by MOVITRAC®; no additional monitoring unit is required.

For both the settings TF message and external error, the motor at the STOP ramp is braked when the message is triggered.

A connection can also be made to 24VIO and a binary output when using TH bimetallic switches. The binary input should also be set to /external error in the parameters.

8.10 Connection braking resistor BW.. / BW..-T

Power section

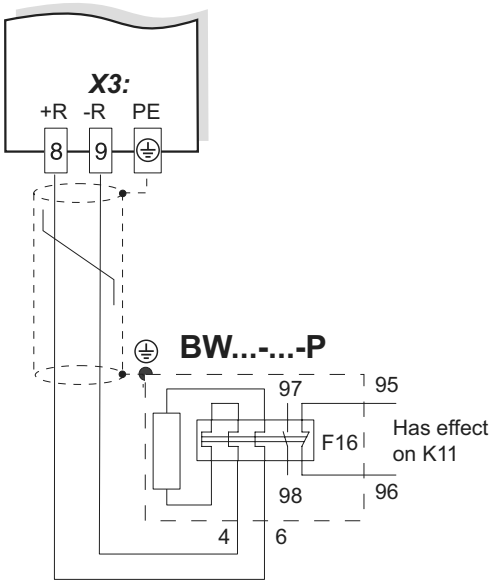

When the auxiliary contact triggers, K11 must be opened and DIØØ "/controller inhibit" must receive a "0" signal. The resistance circuit must not be interrupted!

Power section

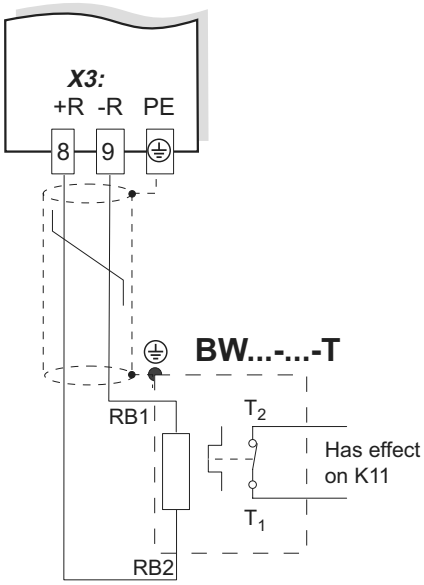

When the internal thermostat triggers, K11 must be opened and DIØØ "/controller inhibit" must have a "0" signal. The resistance circuit must not be interrupted!

Power section

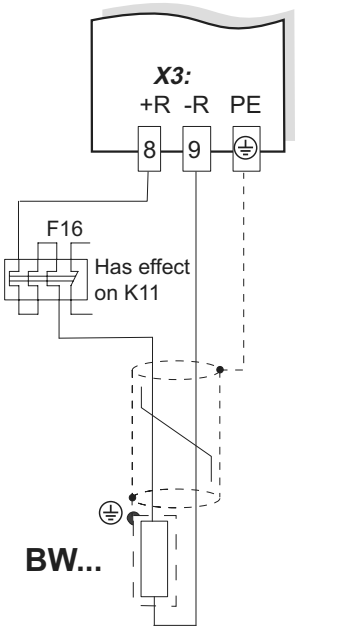

When the external bimetallic relay (F16) triggers, K11 must be opened and DIØØ "/controller inhibit" must have a "0" signal. The resistance circuit must not be interrupted!

Overload protection for braking resistors BW:

Braking resistor type	Overload protection		
	Design specified	Internal temperature switch (..T)	External bimetallic relay (F16)
BW...	–	–	Required
BW...-...-T[1)]	–	One of the two options (internal temperature switch / external bimetallic relay) is required.	
BW...-003 / BW...-005	Adequate	–	Permitted

1) Permitted mounting options: On horizontal or vertical surfaces with brackets at the bottom and perforated sheets at top and bottom. **Mounting not permitted:** on vertical surfaces with brackets at the top, right or left.

8.11 Connection of the brake rectifier

	NOTE
	The connection of the brake rectifier requires a separate supply system cable; supply from the motor voltage is not permitted!

Use contactors of utilization category AC-3 for K11 and K12 only.

Always disconnect the brake in the DC and AC circuits in:

- All hoist applications.
- Drives which require a rapid brake response time.

If the brake rectifier is installed in the control cabinet, route the connecting leads between the brake rectifier and the brake separately from other power cables. Routing together with other cables is only permitted if the other cables are shielded.

Note the corresponding connection regulations for brakes without BG/BGE or BME. Refer to the SEW publication "Drive Engineering – Practical Implementation, volume 4" for detailed information about this topic.

8.12 FSC11B/FIO11B installation

You can enhance the basic units with the FSC11B and FIO11B modules.

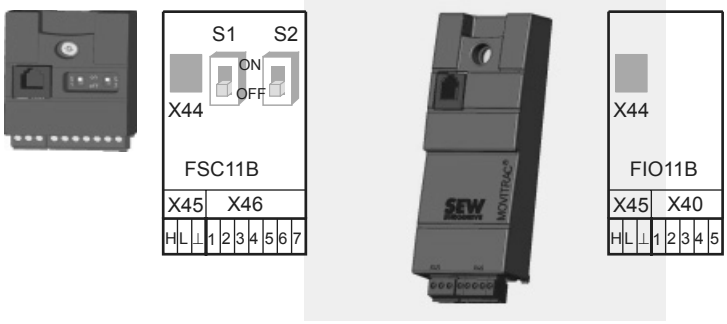

Connection/Unit	FIO11B	FSC11B
RS-485 service interface X44	Yes	Yes
RS-485 terminal connection X45	Yes	Yes
Sbus connection X46	No	Yes
Analog input/output X40	Yes	No

8.12.1 Mounting and installation on FSC11B/FIO11B

Always attach the option to the unit with the screw that is included. For size 0, mount the spacer bolt first (the bolt is already mounted in sizes 1 and greater). Fitting the screw secures the high-frequency EMC connection between the basic unit and the option.

Function	Terminal	Description	Data	FSC11B	FIO11B
Service interface	X44	Via RJ10 plug connector	Only for service purposes Maximum cable length 3 m (9.8 ft)	Yes	Yes
RS-485 interface	X45:H	ST11: RS-485+		Yes	Yes
	X45:L	ST12: RS-485–			
	X45:⊥	GND: Reference potential			
System bus	X46:1	SC11: SBus high	CAN bus to CAN specification 2.0, parts A and B Max. 64 participants Terminating resistor 120 Ω can be activated via DIP switch	Yes	No
	X46:2	SC12: SBus low			
	X46:3	GND: Reference potential			
	X46:4	SC21: SBus high			
	X46:5	SC22: SBus low			
	X46:6	GND: Reference potential			
DC 24 V	X46:7	24VIO: Auxiliary voltage / external voltage supply		Yes	No
Analog input	X40:1	AI2: Voltage input	–10 ... +10 V R_i > 40 kΩ Resolution 10 bit Sampling time 5 ms	No	Yes
	X40:2	GND: Reference potential			
Analog output	X40:3	GND: Reference potential	0 ... +10 V I_{max} = 2 mA 0 (4) ... 20 mA Resolution 10 bit Sampling time 5 ms Short-circuit proof, protected against external voltage up to 30 V	No	Yes
	X40:4	AOV1: Voltage output			
	X40:5	AOI1: Current output			

The DC 24 V function of X46:7 is identical to X12:8 of the basic unit. All GND terminals of the unit are connected to each other.

Cable specification

- Use a 4-core twisted and shielded copper cable (data transmission cable with braided copper shield). The cable must meet the following specifications:
  - Core cross-section 0.25 ... 0.75 mm^2 (AWG 23 ... AWG 18)
  - Cable resistance 120 Ω at 1 MHz
  - Capacitance per unit length ≤ 40 pF/m at 1 kHz

  Suitable cables include CAN bus or DeviceNet cables.

Shielding

- Connect the shield to the electronics shield clamp on the inverter or master controller and make sure it is connected over a wide area at both ends.
- There is no need for a ground connection for a connection between MOVITRAC® B and gateways or MOVITRAC® B and MOVITRAC® B with shielded cables. A 2-core cable is permitted in this case.
- When connecting MOVIDRIVE® B and MOVITRAC® B, always ensure that the electrical isolation between the reference potential DGND and ground is removed.

STOP

Potential displacement

Possible consequences include malfunctions that could lead to irreparable damage to the unit.

- There must not be any potential displacement between the connected units. Take appropriate measures to avoid potential displacement, such as connecting the unit ground connectors using a separate cable.

8.12.2 Installation: System bus (SBus) to FSC11B

Max. 64 CAN bus participants can be addressed using the system bus (SBus). Use a repeater after 20 or 30 participants, depending on the length of the cables and the cable capacity. The SBus supports transmission technology compliant with ISO 11898.

S1	S2	SC11/SC12	SC21/SC22
Off	Off	CAN1	CAN1
On	Off	CAN1 concluded	–
X	On	Reserved	

System bus connection MOVITRAC® B (same terminals)

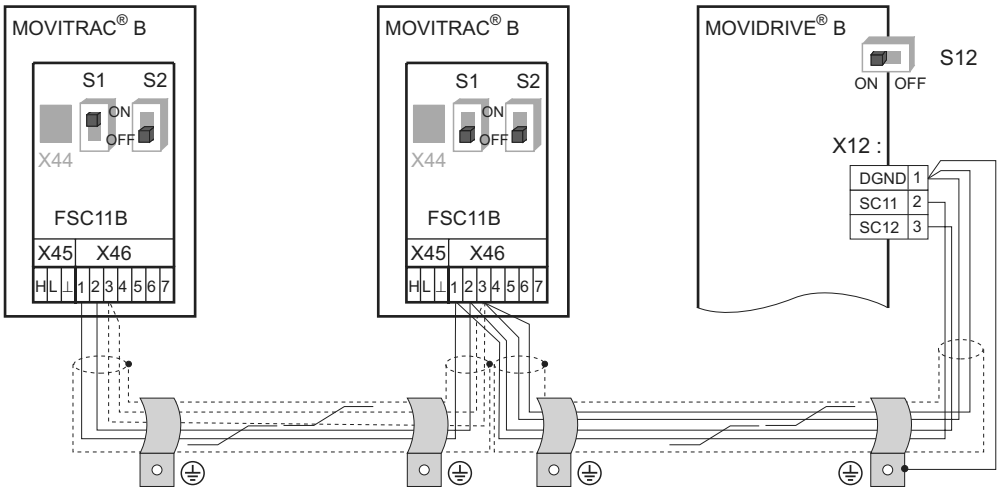

System bus connection MOVITRAC® B (different terminals)

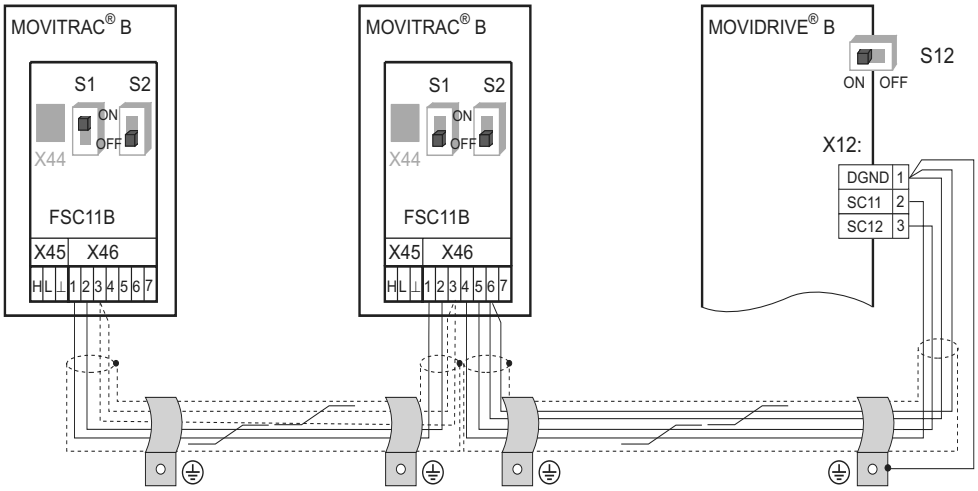

System bus connection MOVITRAC® B with UFx

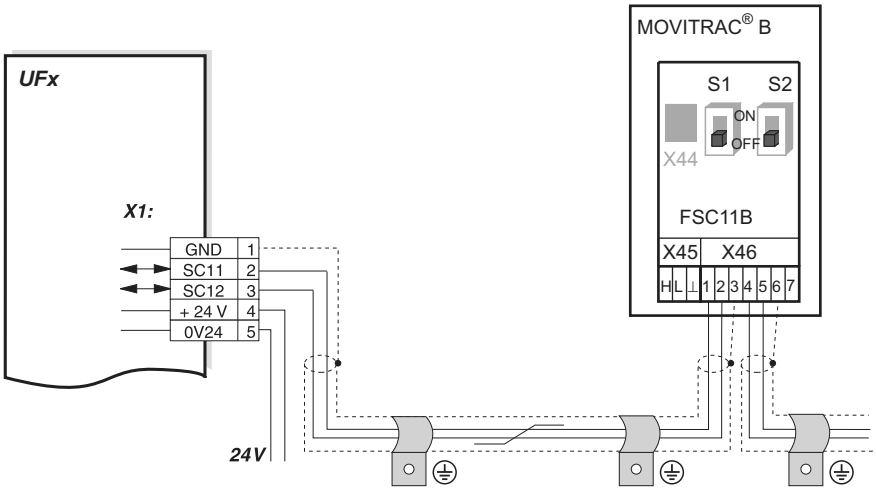

System bus connection MOVITRAC® B with UOH11B

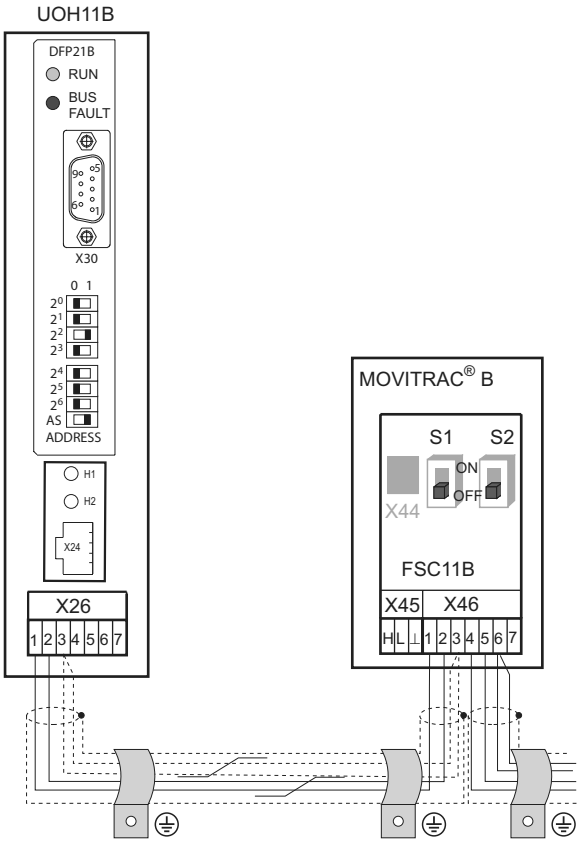

Cable length

- The permitted total cable length depends on the baud rate setting of the SBus (P884):
  - 125 kBaud: 320 m (1050 ft)
  - 250 kBaud: 160 m (525 ft)
  - **500 kBaud: 80 m (260 ft)**
  - 1000 kBaud: 40 m (130 ft)
- You must use shielded cables.

	NOTE
	Terminating resistor: Switch on the system bus terminating resistor (S1 = ON) at the start and end of the system bus connection. Switch off the terminating resistor on the units in between (S1 = OFF). Certain units have a permanently integrated terminating resistor that cannot be switched off. This is the case for UFx and UOH/DFx gateways. These gateways form the end of the physical line. **Do not connect any external terminating resistors!**

8.12.3 Installation, RS-485 interface to FSC11B

The RS-485 interface can be used for connecting max. 32 MOVITRAC® units or 31 MOVITRAC® units and a higher-level controller (PLC).

MOVITRAC® B to RS-485 connection

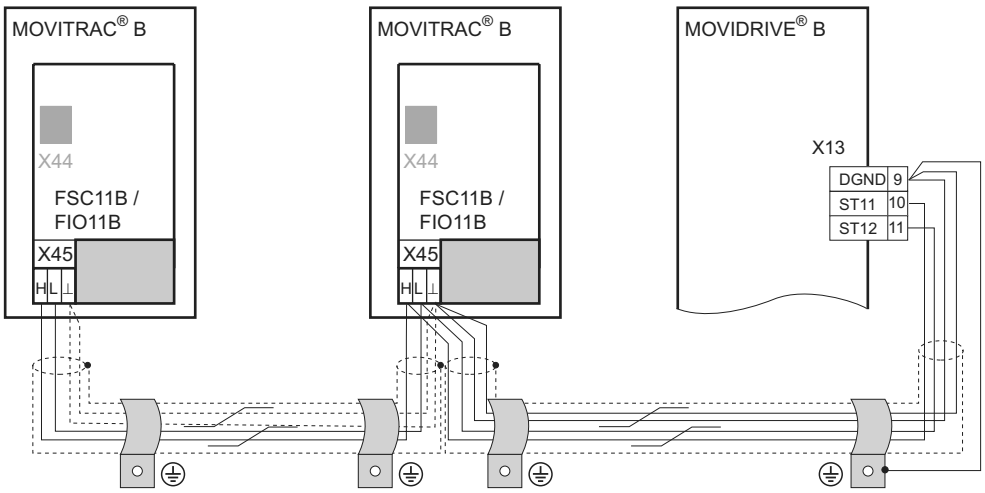

Cable length
- The permitted total cable length is 200 m (656 ft).
- You must use shielded cables.

	NOTE
	Terminating resistor: Dynamic terminating resistors are installed. **Do not connect any external terminating resistors.**

8.12.4 Wiring the FIO11B analog module

Bipolar Analog Input AI2	Unipolar Analog Input AI2	Current Analog Output AOC1	Voltage Analog Output AOV1
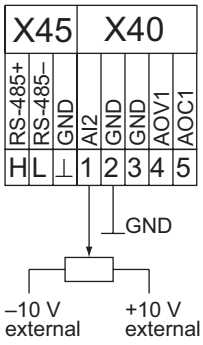	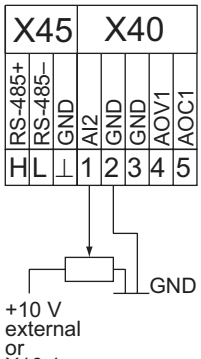	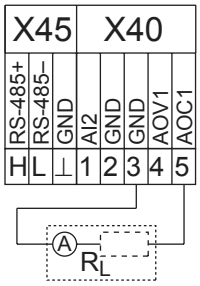 $R_L \leq 750\ \Omega$	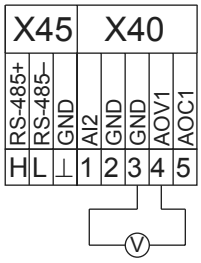

8.13 MBG11A setpoint control module installation

- Mounting A from the rear using 4 tapped holes
- Mounting B from the front using 2 retaining holes

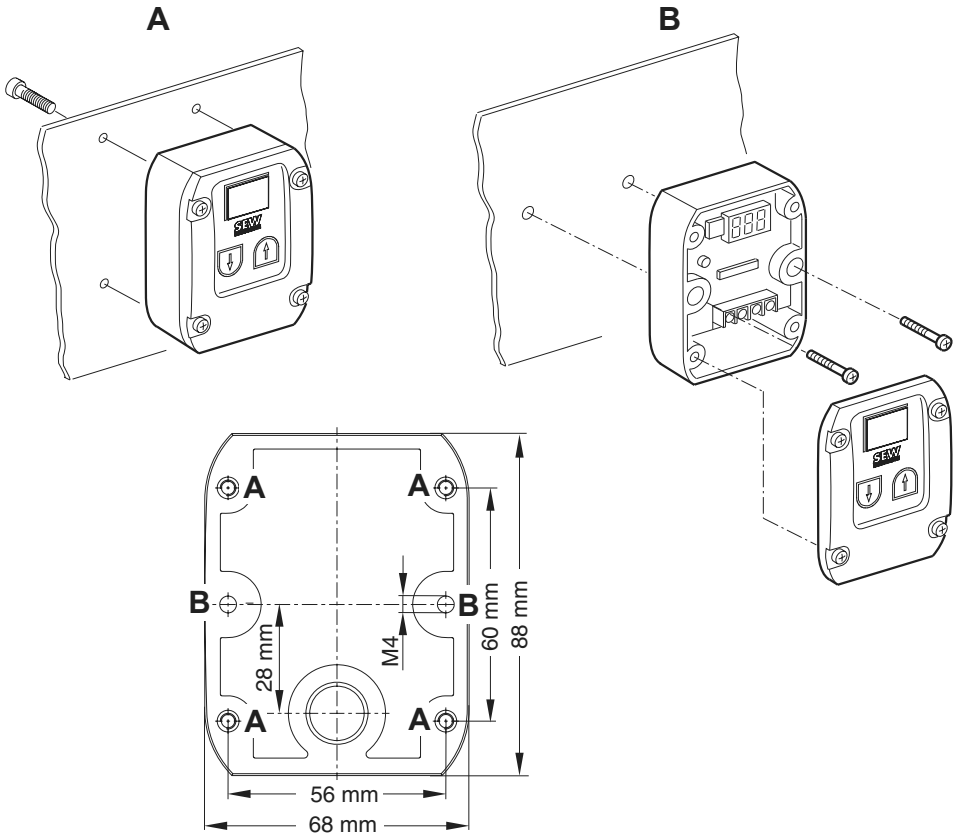

8.13.1 Connection

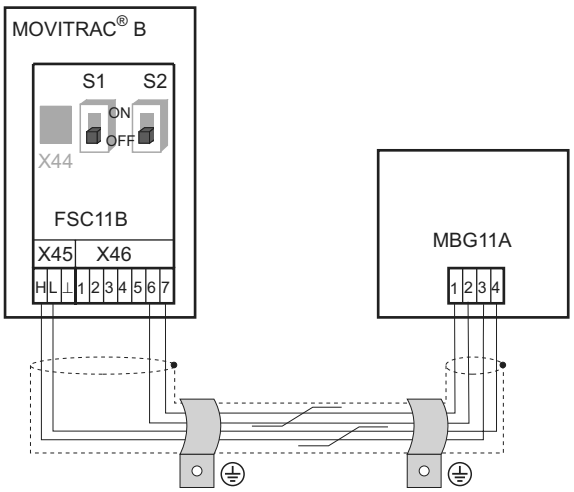

9 Startup

9.1 Startup: Brief Description

The frequency inverter MOVITRAC® B can be connected directly to a motor of the same power. For example: A 1.5 kW (2.0 HP) motor can be connected directly to a MC07B0015.

9.1.1 Procedure

1. Connect the motor to the MOVITRAC® B (terminal X2).
2. You have the option of connecting a braking resistor (terminal X2).
3. The following signal terminals must be controlled with your control system:
   - Enable DI∅3
   - As required: CW/STOP DI∅1 or CCW/STOP DI∅2
   - Setpoint:
     – Analog input X10 and/or
     – DI∅4 = n11 = 150 rpm and / or
     – DI∅5 = n12 = 750 rpm and / or
     – DI∅4 + DI∅5 = n13 = 1500 rpm
   - For brake motors: DO∅2 = Brake control system using brake rectifiers
4. You have the option of connecting the following signal terminals:
   - DI∅∅ = Fault reset
   - DO∅1 = /Fault (designed as a relay contact)
   - DO∅3 = Ready for operation
5. Check the controller for required functionality.
6. Connect the frequency inverter to the mains (X1).

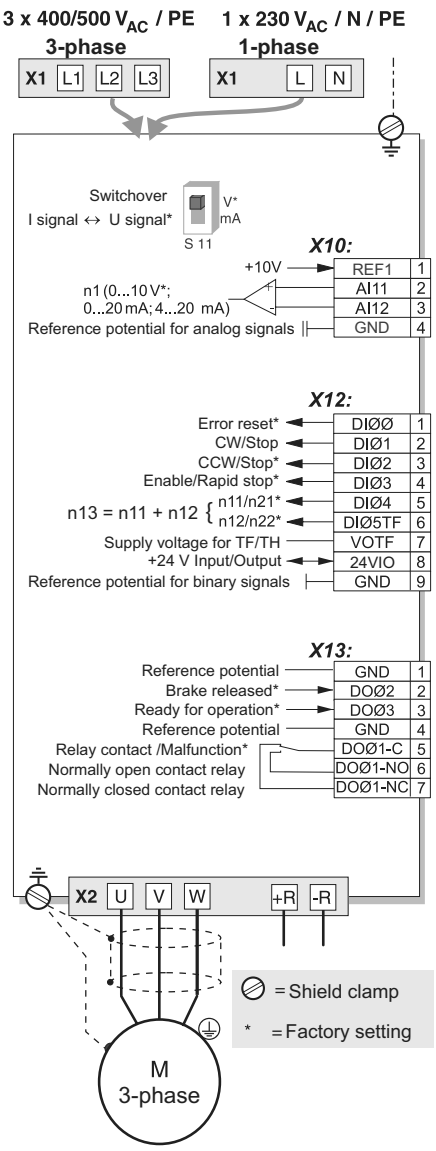

9.1.2 Notes

Signal terminal functions and setpoint settings can be modified using the FBG11B keypad or a PC. A PC connection requires the FSC11B front option or one of the following interface adapters: UWS21B / UWS11A / USB11A.

	NOTE
	The MOVITRAC® B frequency inverter should only be operated in strict observance of the detailed operating instructions!

9.2 General startup instructions

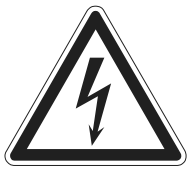

⚠ HAZARD

Uncovered power connections.

Severe or fatal injuries from electric shock.

- Install the touch guard according to the regulations.
- Never start the unit if the touch guard is not installed.

9.2.1 Prerequisite

The drive must be configured correctly to ensure that startup is successful.

MOVITRAC® B frequency inverters are factory set to be taken into operation with the SEW motor adapted to the correct power level (4-pole, 50 Hz) in V/f control mode.

9.2.2 Hoist applications

⚠ HAZARD

Risk of fatal injury if the hoist falls.

Severe or fatal injuries

MOVIDRIVE MDX60B/61B is not designed for use as a safety device in hoist applications. Use monitoring systems or mechanical protection devices to ensure safety.

9.3 Preliminary work and resources basic unit

- Check the installation (Sec. Installation).

⚠ HAZARD

Risk of crushing if the motor starts up unintentionally.

Severe or fatal injuries

- Ensure that the motor cannot start inadvertently, for example, by removing the electronics terminal block X13.
- Additional safety precautions must be taken depending on the application to avoid injury to people and damage to machinery.

- Connect the supply system and the motor.
- Connect the signal terminals.
- Switch on the power supply system.

9.4 Preliminary work and resources for MOVITRAC® B with keypad

- Check the installation (see section "Installation").

⚠ HAZARD

Risk of crushing if the motor starts up unintentionally.

Severe or fatal injuries

- Ensure that the motor cannot start inadvertently, for example, by removing the electronics terminal block X13.
- Additional safety precautions must be taken depending on the application to avoid injury to people and damage to machinery.

- Connect the supply system and the motor. **Do not connect signal terminals!**
- Switch on the power supply system.
- Display shows Stop.
- Program the signal terminals.
- Set the parameters correctly (e.g. ramps).
- Check the set terminal assignment (P601 ... P622).
- Switch off the power supply system.
- Connect the signal terminals.
- Switch on the power supply system.

NOTE

The inverter automatically changes parameter values once you perform a startup.

9.5 Optional FBG11B keypad

Key arrangement and symbols on keypad:

9.5.1 Keypad functions

The UP / DOWN and ENTER / OUT buttons are used for navigating through the menus. Use the RUN and STOP/RESET buttons to control the drive. The setpoint control module is used for setpoint specification.

	Use UP / DOWN to select symbols and change values.
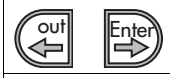	ENTER/OUT to activate and deactivate the symbols or parameter menus.
	Press "RUN" to start the drive.
	"STOP/RESET" is used for resetting errors and for stopping the drive.

The STOP/RESET button has priority over a terminal enable or an enable via the interface. If you stop a drive using the STOP/RESET key, you have to enable it again by pressing the RUN key.

	NOTE
	After switching off the power supply, press the STOP key to lift the lock.

The STOP/RESET key can be used for performing a reset after a fault has occurred with a programmed error response. The drive is then inhibited and must be enabled using the RUN key. You can deactivate the STOP function with parameter 760 using FBG11B.

If you stop the drive by pressing the STOP/RESET key, the Stop display flashes. This signal indicates you have to enable the drive using the "RUN" key.

After copying the parameter set in MOVITRAC® B, the unit is also stopped.

See also, Data backup with FBG11B.

9.6 Basic operation of the FBG11B keypad

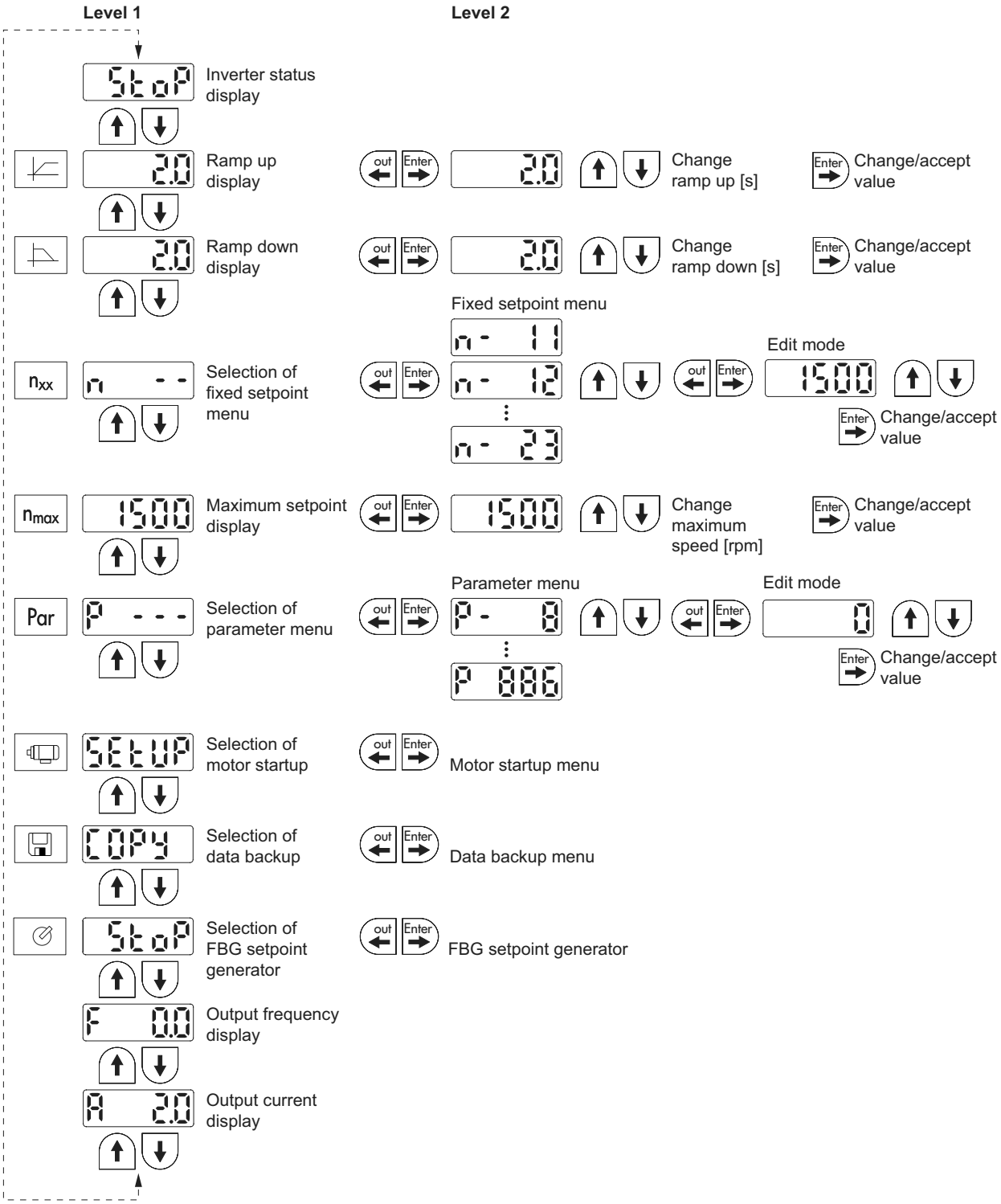

9.6.1 Menu system

The LED integrated in the symbol lights up when you select a symbol. In the case of symbols, which only represent display values, the current display value appears immediately on the display.

Changing parameters

You can select the required parameter by selecting a symbol and pressing the ENTER key.

Press the ENTER button again to edit the parameter value. You can alter the value when the LED in the corresponding symbol flashes. Pressing the ENTER key again activates the value and the symbol is not flashing any longer.

9.6.2 Status displays

If the status is "Drive enabled," the display will show the calculated actual speed. See also "Status display".

9.6.3 Fault indication

In the event of an error or fault, the display changes and flashes the fault code, for example F-11 (refer to the fault list in the "Operation and Service" section). This situation will not occur during active startup.

9.6.4 Warnings

You may not alter any parameter in any operating mode. Try this anyway to display code r-19 ... r-32. The display shows acode corresponding to the specific action, e.g. r-28 (controller inhibit necessary). You will find a list of warnings in the section Operation and service.

9.6.5 Parameter menu change: Short ↔ Long

Using parameter P800, you can switch back and forth between short menu and long menu. It is indicated in the parameter description and parameter list which parameters are accessible via short and long menu.

9.7 FBG11B setpoint control module and external setpoint specification

FBG11B setpoint generator of the keypad (local manual operation): LED flashes.

External setpoint selection

Control via

– Terminals
– Serial interface
– Setpoint potentiometer connected to AI11/AI12

9.7.1 FBG11B setpoint control module

The only relevant parameters in "FBG setpoint control module" operating mode are:

- *P122 Direction of rotation FBG manual operation*
- "RUN" and "STOP/RESET" buttons
- Setpoint control module

When the FBG setpoint control module is activated, the symbol flashes.

You limit the smallest speed with *P301 Minimum speed* and the largest speed with the n_{max} symbol.

After a fault, a reset can be performed using the "STOP/RESET" button via the terminal or the interface. After a reset, the "manual setpoint control module" operating mode will be active once again. The drive remains stopped.

The Stop display flashes to indicate that you have to re-enable the drive by pressing "RUN."

The *P760 Locking RUN/STOP keys* parameter does not have any effect in "manual setpoint control module" operating mode.

Removing the FBG11B keypad will trigger a stop response.

9.7.2 External setpoint selection

Set direction of rotation

You can specify the set direction of rotation:

- "CW/STOP" and "CCW/STOP" in *P101 Control signal source = Terminals* or *P101 Control signal source = 3 wire-control*
- The polarity of the setpoint in the process data word in *P101 Control signal source = RS485 or SBus* **and** *P100 Setpoint source = RS485 or SBus*

Set speed

You can specify the set speed:

- Setpoint control module (if *P121 Addition FBG setpoint control module* is set to ON)
- *P100 Setpoint source*
  - Fixed setpoints
  - Fixed setpoints with analog input
  - Process data word from SBus or RS-485
  - Motor potentiometer

Direction of rotation enable with RS-485 or SBus

Unipolar setpoint sources:

Unipolar / Fixed setpoint
Motor potentiometer / Fixed setpoint
Fixed setpoint + AI1
Fixed setpoint * AI1
Frequency setpoint input / Fixed setpoint

The direction of rotation is set with the CW or CCW terminals.

Bipolar setpoint sources:

Bipolar / Fixed setpoint
RS 485 / Fixed setpoint
SBus 1 / Fixed setpoint

The direction of rotation is determined by the setpoint. Enable with terminal CW or CCW.

9.8 Startup with the FBG11B keypad

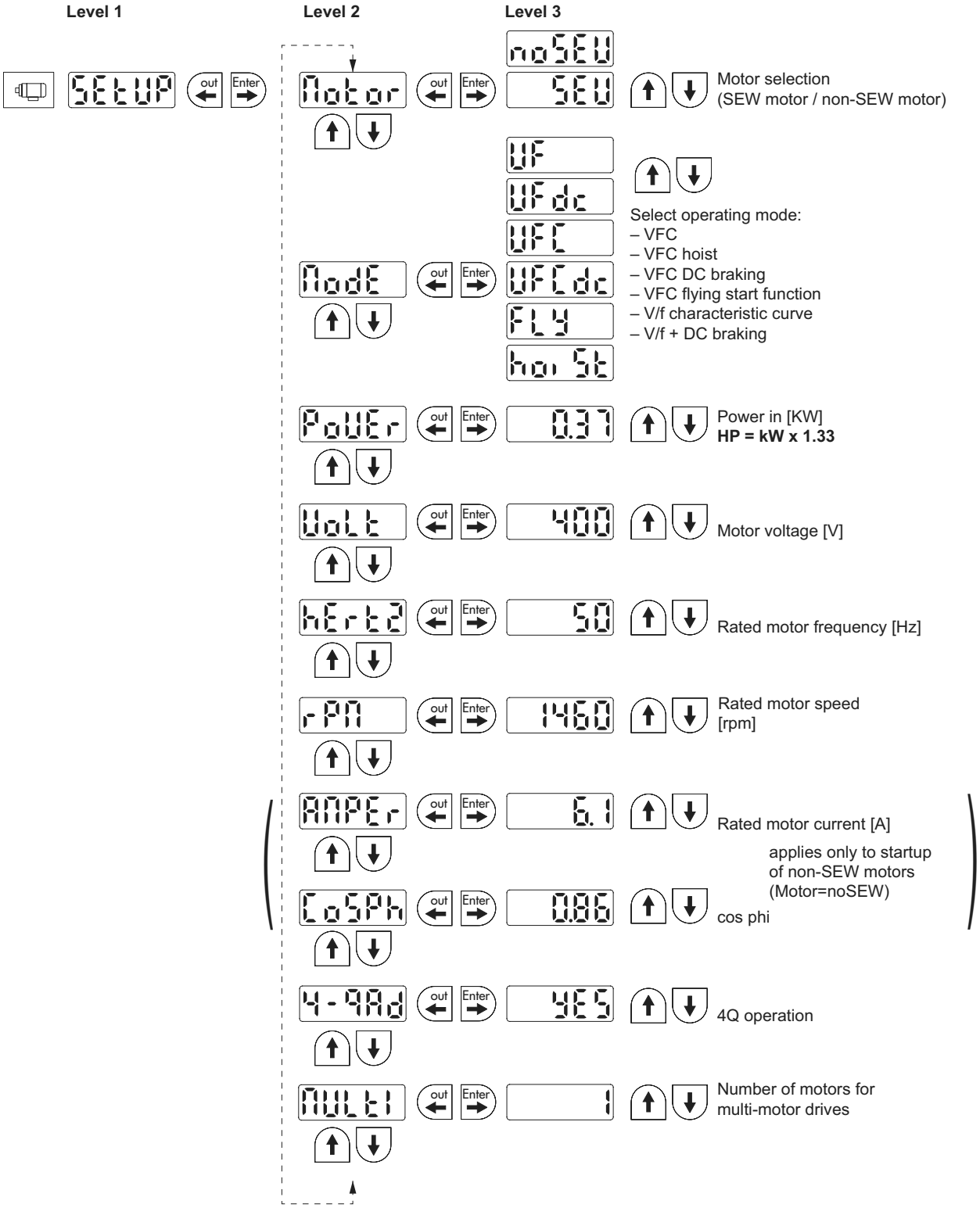

9.8.1 Required data

The following data is required to ensure startup is successful:

- Motor type (SEW or non-SEW motor)
- Motor data
  - Rated voltage and rated frequency
  - Additionally for non-SEW motors: rated current, rated power, power factor cosφ and rated speed
- Rated supply voltage

9.8.2 Activating startup

Requirements:

- Drive "No enable": Stop

If a smaller or a larger motor is connected (maximum difference one size), then you have to choose the value closest to the rated motor power.

The complete startup procedure is not complete until you have returned to the main menu level by pressing the OUT button.

You can then perform the startup only with motor parameter set 1.

	NOTE
	The SEW motor startup is designed for 4-pole motors. It may be useful to startup 2-pole or 6-pole SEW motors as non-SEW motors.

9.8.3 V/f

The default operating mode setting is V/f. Use this operating mode if you have no particular requirements and when a high maximum speed is required.

9.8.4 VFC

Startup the inverter in operating mode VFC or VFC & DC braking for the following requirements:

- High torque
- Continuous duty at low frequencies
- Accurate slip compensation
- More dynamic behavior

To do this, during startup you must select operating mode VFC or VFC & DC braking in point P-01.

9.8.5 Startup multi-motor drive

Multi-motor drives are mechanically connected to each other (e.g., chain drive with several motors). Observe the notes in the publication "Multi-Motor Drives".

Multi-motor drives are possible with installed identical SEW motors only.

- Set the multi parameter of the motor startup to the number of connected motors.

9.8.6 Startup of group drives

Group drives are mechanically decoupled from each other (e.g., different conveyor belts). In this operating mode, the inverter operates without slip compensation and with a constant V/f ratio.

You can operate a group of asynchronous motors on one inverter in V/f characteristic curve operating mode. Important:

- Select V/f operating mode
- Set the power of the largest motor
- Disable automatic adjustment P320/330
- Set boost P321/331 to zero
- Set IxR compensation P322/332 to zero
- Set slip compensation P324/334 to zero
- Set current limitation P303/313 to 1.5 times the total current of all motors
- Set I_{Rated}-UL monitoring P345/346 to the total current of the connected motors. Motor protection must be implemented individually.

In this operating mode, the inverter operates without slip compensation and with a constant V/f ratio.

	NOTE
	The parameter settings apply to all connected motors.

9.9 Startup with DBG60B

9.9.1 Required data

The following data is required to ensure startup is successful:

- Motor type (SEW or non-SEW motor)
- Motor data
  - Rated voltage and rated frequency
  - Additionally for non-SEW motors: rated current, rated power, power factor cosφ and rated speed
- Rated supply voltage

9.9.2 Selecting a language

The figure below shows the keys for selecting the language.

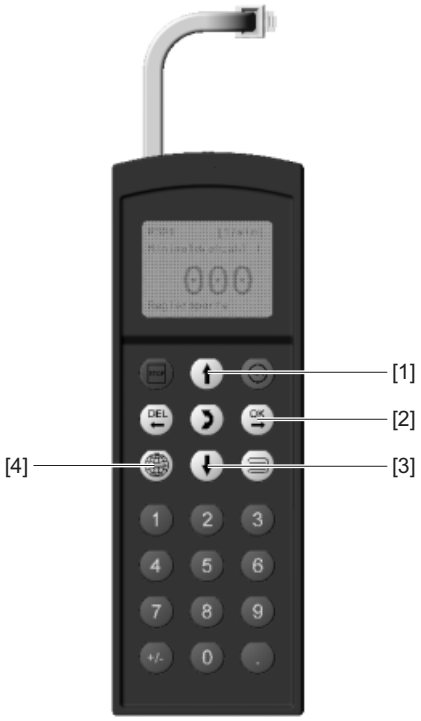

[1]	↑ key	Move up to the next menu item
[2]	OK key	Confirm entry
[3]	↓ key	Move down to the next menu item
[4]	Language key	A list of languages is displayed

The following text appears on the display when the keypad is switched on for the first time or after activating the start mode:

SEW
EURODRIVE

The symbol for language selection then appears on the display.

Proceed as follows to select the language:

- Press the language key. A list of languages is displayed on the screen.
- Select the desired language using the ↑ / ↓ keys
- Confirm your language selection by pressing the OK key. The basic display is now shown in your chosen language.

9.9.3 Startup

The figure below shows the keys required for startup.

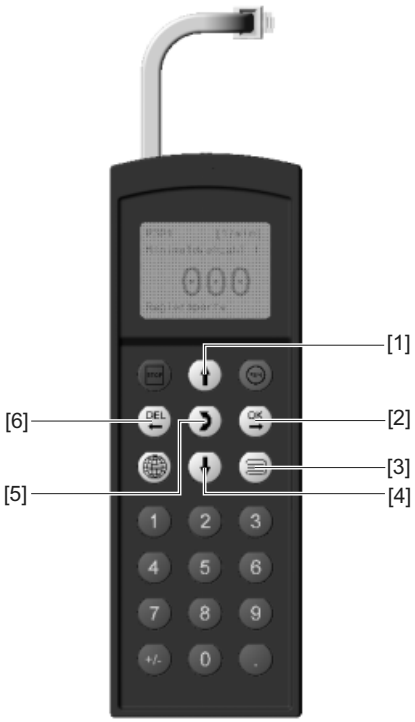

[1]	↑ key	Move up to the next menu item
[2]	OK key	Confirm entry
[3]	Context key	Activate the context menu
[4]	↓ key	Move down to the next menu item
[5]	↔ key	Change the menu, display mode ↔ edit mode
[6]	DEL key	Cancel or abort startup

9.9.4 Startup procedure

1. Enter "0" signal at terminal X12:2 (DIØ1 "/CW/STOP), e.g. by disconnecting X13 the electronics terminal block.

```
0.00rpm
0.000Amp
CONTROLLER INHIBIT
```

2. Press the context key to activate the context menu.

```
PARAMETER MODE
VARIABLE MODE
BASIC VIEW
```

3. Scroll down with the ↓ key until you have selected the menu option "STARTUP".

```
MANUAL MODE
STARTUP
COPY TO DBG
COPY TO MDX
```

4. To startup, select the OK key. The first parameter appears. The flashing cursor under the parameter number indicates that the keypad is in display mode.
   - Use the ↔ key to switch to edit mode. The flashing cursor disappears.
   - Use the ↑ or ↓ key to select "PARAMETER SET 1" or "PARAMETER SET 2".
   - Press the OK key to confirm your selection.
   - Use the ↔ key to switch back to display mode. The flashing cursor appears again.
   - Use the ↑ key to choose the next parameter.

```
PREPARE FOR
STARTUP
```

```
C00*STARTUP

PARAMETER SET 1
PARAMETER SET 2
```

5. Select the operating mode you require. Use the ↑ key to choose the next parameter.

```
C01*OPER. MODE 1
STANDARD (V/f)
VFC1
```

6. Select the motor type. If a 2 or 4-pole SEW motor is connected, select the correct motor from the list.
   If a non-SEW motor or an SEW motor with more than four poles is connected, select "NON-SEW MOTOR" from the list.
   Use the ↑ key to choose the next parameter.

```
C02*MOTOR TYPE 1
DT71D2
DT71D4
DT80K2
```

```
C02*MOTOR TYPE 1

NON-SEW MOTOR
DT63K4/DR63S4
```

7. Enter the rated motor voltage for the selected connection type according to the value specified on the nameplate.

   Example: Nameplate 230Δ/400W 50 Hz
   ⅄ connection → enter "400 V".
   Δ connection, transition point at 50 Hz → enter "230 V".
   Δ connection, transition point at 87 Hz → also enter 230 V. However, set parameter P302 "MAXIMUM SPEED 1" to the value for 87 Hz after startup first and then start the drive.

   Example: Nameplate 400Δ/690W 50 Hz
   Only Δ connection possible → enter "400 V".
   ⅄ connection is not possible.

   Use the ↑ key to choose the next parameter.

```
C03*                    V
MOT. RATED VOLT 1
              +400,000
```

8. Enter the rated frequency specified on the motor nameplate.
   Example: 230Δ/400W 50 Hz
   Enter "50 Hz" in ⅄ and Δ connection.

   Use the ↑ key to choose the next parameter.

```
C04*                    Hz
MOT. RATED FREQ. 1
                +50,000
```

FOR SEW MOTORS

9. The motor values are stored for SEW 2 and 4-pole motors and need not be entered.

FOR NON-SEW MOTORS

9. Enter the following motor nameplate data:
   - Note C10* rated motor current, connection type (⅄ or Δ).
   - C11* rated motor power
   - C12* power factor cos
   - C13* rated motor speed

10. Enter the rated power supply voltage (C05* for SEW motor, C14* for non-SEW motor).

```
C05*                    V
MAINS RAT. VOLT. 1
                +400,000
```

11. Start the calculation for the startup data by choosing "YES". The process lasts a few seconds.

```
C06*CALCULATION

NO
YES
```

FOR SEW MOTORS

12. The calculation is performed. After calculation, the next menu item appears automatically.

```
C06*SAVE

NO
YES
```

FOR NON-SEW MOTORS

12. For non-SEW motors, a calibration process is required to perform the calculation:
    - When prompted, apply a "1" signal to terminal X12:2 (DIØ1 "/CW/STOP").
    - Apply a "0" signal to terminal X12:2 again after the calibration is complete.
    - After calculation, the next menu item appears automatically.

13. Set "SAVE" to "YES" The data (motor parameters) is copied to the non-volatile memory of MOVITRAC®.

```
DATA IS
BEING COPIED...
```

14. The startup procedure is now complete. Use the DEL key to return to the context menu.

```
MANUAL MODE
STARTUP
COPY TO DBG
COPY TO MC07B
```

15. Use the ↓ key to scroll down until the menu item "EXIT" is selected.

EXIT UNIT **SETTINGS**

16. Confirm your selection by selecting OK. The basic display appears.

0.00rpm 0.000Amp CONTROLLER INHIBIT

⚠ HAZARD

Parameter settings incorrect due to unsuitable data sets.

Severe or fatal injury.

Make sure that the data set you copy is suitable for the application.

- Enter any parameter settings which differ from the factory settings in the parameter list.
- In the case of non-SEW motors, set the correct brake application time (P732 / P735).
- Observe the notes for starting the motor in the section "Starting the Motor".
- With Δ connection and transition point at 87 Hz, set parameter P302/312 "Maximum speed 1/2" to the value for 87 Hz.

9.9.5 Setting parameters

Proceed in this order to set the parameters:

- Use the context key to call up the context menu. In the context menu, select the "PARAMETER MODE" menu item. Press the OK key to confirm your selection. The flashing cursor under the parameter number indicates that the keypad is in parameter mode.
- Use the ↔ key to switch to edit mode. The flashing cursor disappears.
- Using the ↑ or ↓ key, you can to select or set the correct parameter value.
- Press the OK key to confirm the selection or setting.
- Use the ↔ key to switch back to parameter mode again. The flashing cursor appears again.
- Use the ↑ key to choose the next parameter.

9.10 Startup with PC and MOVITOOLS® MotionStudio

Start MOVITOOLS® MotionStudio in the Windows start menu:

Programs / SEW / MOVITOOLS MotionStudio 5.x/MotionStudio 5.x

Press the MOVITOOLS® MotionStudio [Scan] button to list all connected units in the unit tree.

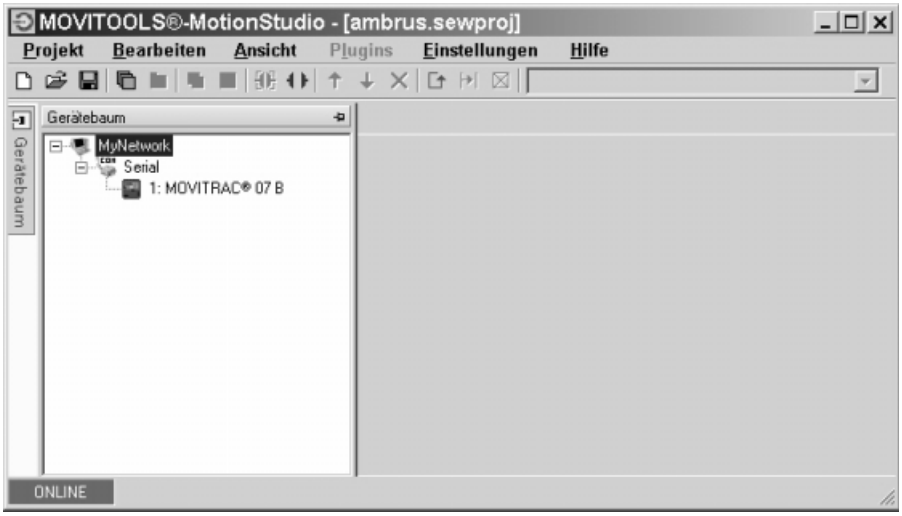

You can perform a startup by right-clicking on one of the units. You can find additional information in the online Help.

9.11 Startup for MBG11A setpoint control module

You cannot simultaneously establish communication between MOVITRAC® B / MBG11A and MOVITRAC® B / PC.

The MBG11A can simultaneously specify a setpoint up to 31 MOVTRAC® B units.

9.11.1 Parameter settings

You must set the following parameters in MOVITRAC® B for any settings that differ from those set at the factory (use the parenthesis values if an FBG11B is used for parameter setting):

- P100: RS 485 (2)
- P101: RS 485 (1)
- P871: Set PO2 to "Speed [%]", then P876 PO data enable to "Yes".

The speed is now displayed: –100 % ... 100 % corresponding to $-n_{max}$ ... n_{max}.

9.11.2 Input terminals

The following input terminals must be connected with 24 V.

- DI01 CW / Stop (positive + negative direction of rotation by selecting the +/– sign on the MBG11A).
- DI03 Enable / Stop

9.11.3 Settings for process data word

If you do not change the PO2 process data word, you can also use the MBG11B. The conversion is 1 % = 32 rpm. The results from the relationship 4000 hex = 100 % speed. Refer to the following tables for the respective value.

PO2 = Speed (standard parameter setting P871 = speed)

Percentage	Hex	Decimal	Speed
1 %	A4 hex	164 dec	32
10 %	666 hex	1638 dec	328
25 %	1000 hex	4096 dec	819.2
33 %	1555 hex	5461 dec	1092.3
50 %	2000 hex	8192 dec	1638.4
75 %	3000 hex	12288 dec	2457.6
100 %	4000 hex	16384 dec	3276.8

PO2 = Speed [%] (changed parameter setting P871 = speed [%])

Percentage	Hex	Decimal	Speed
1 %	A4 hex	164 dec	n_max / 100
10 %	666 hex	1638 dec	n_max / 10
25 %	1000 hex	4096 dec	n_max / 4
33 %	1555 hex	5461 dec	n_max / 3
50 %	2000 hex	8192 dec	n_max / 2
75 %	3000 hex	12288 dec	n_max / 1.333
100 %	4000 hex	16384 dec	n_max

9.12 Starting the motor

9.12.1 Analog setpoint specification

The following table shows which signals must be present on terminals X11:2 (AI1) and X12:1 … X12:4 (DIØØ … DIØ3) when the "unipolar/fixed setpoint" setpoint is selected (P100), in order to operate the drive with an analog setpoint entry.

Function	X11:2 (AI11) Analog input n1	X12:1 (DIØØ) /Controller inhibit[1)]	X12:2 (DIØ1) CW/stop	X12:3 (DIØ2) CCW/stop	X12:4 (DIØ3) Enable/Stop	X12:5 (DIØ4) n11/n21	X12:6 (DIØ5) n12/n22
Controller inhibit	X	0	X	X	X	0	0
Stop	X	1	X	X	0	0	0
Enable and stop	X	1	0	0	1	0	0
Clockwise at 50 % n_{max}	5 V	1	1	0	1	0	0
Clockwise at n_{max}	10 V	1	1	0	1	0	0
Counter-clockwise at 50 % n_{max}	5 V	1	0	1	1	0	0
Counter-clockwise at n_{max}	10 V	1	0	1	1	0	0

1) No default setting

The following travel cycle shows by way of example how the motor is started with the assignment of terminals X12:1 … X12:4 and analog setpoints. Binary output X10:3 (DOØ2 "/Brake") is used for switching brake contactor K12.

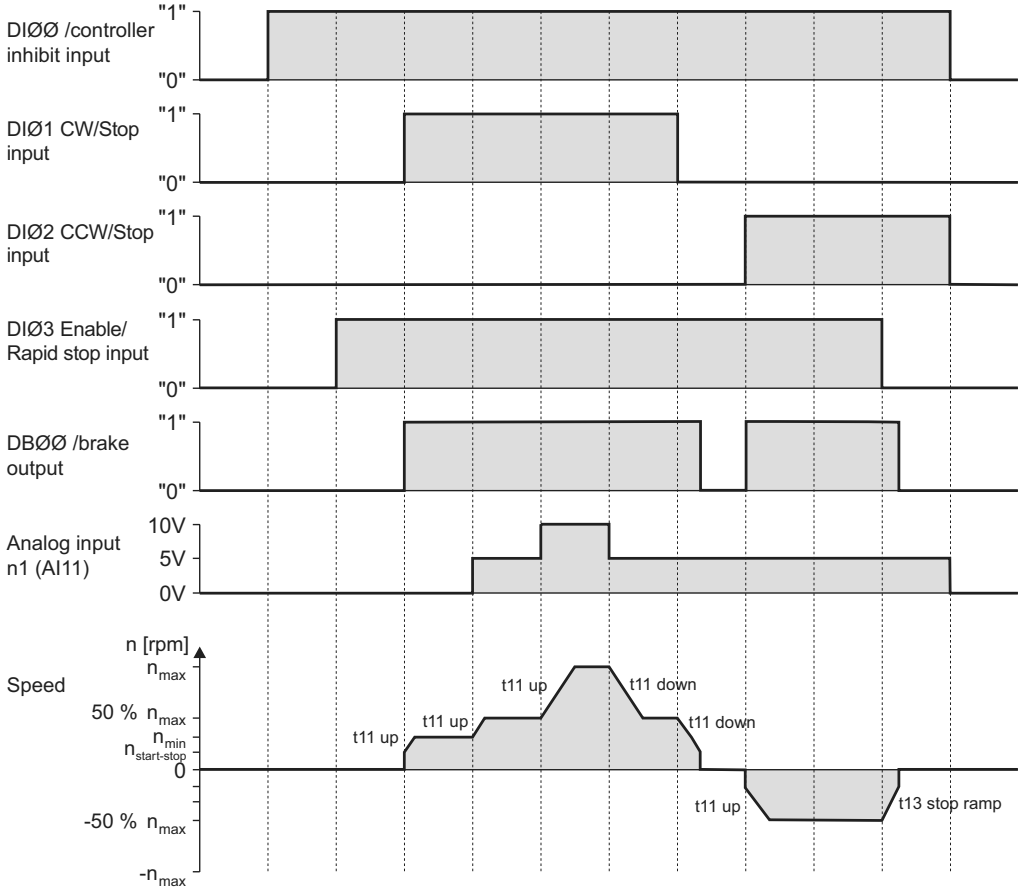

	NOTE
	The motor is not energized in the event of controller inhibit. A motor without brake will coast to standstill.

9.12.2 Fixed setpoints

The following table shows which signals must be present on terminals X12:1 … X12:6 (DIØØ … DIØ5) when the "unipolar/fixed setpoint" setpoint is selected (P100), in order to operate the drive with the fixed setpoints.

Function	X12:1 (DIØØ) /Controller inhibit	X12:2 (DIØ1) CW/stop	X12:3 (DIØ2) CCW/stop	X12:4 (DIØ3) Enable/Stop	X12:5 (DIØ4) n11/n21	X12:6 (DIØ5) n12/n22
Controller inhibit	0	X	X	X	X	X
Stop	1	X	X	0	X	X
Enable and stop	1	0	0	1	X	X
CW operation with n11	1	1	0	1	1	0
CW operation with n12	1	1	0	1	0	1
CW operation with n13	1	1	0	1	1	1
CCW operation with n11	1	0	1	1	1	0

The following travel cycle shows by way of example how the drive is started with the assignment of terminals X12:1 … X12:6 and the internal fixed setpoints. Binary output X10:3 (DOØ2 "/Brake") is used for switching brake contactor K12.

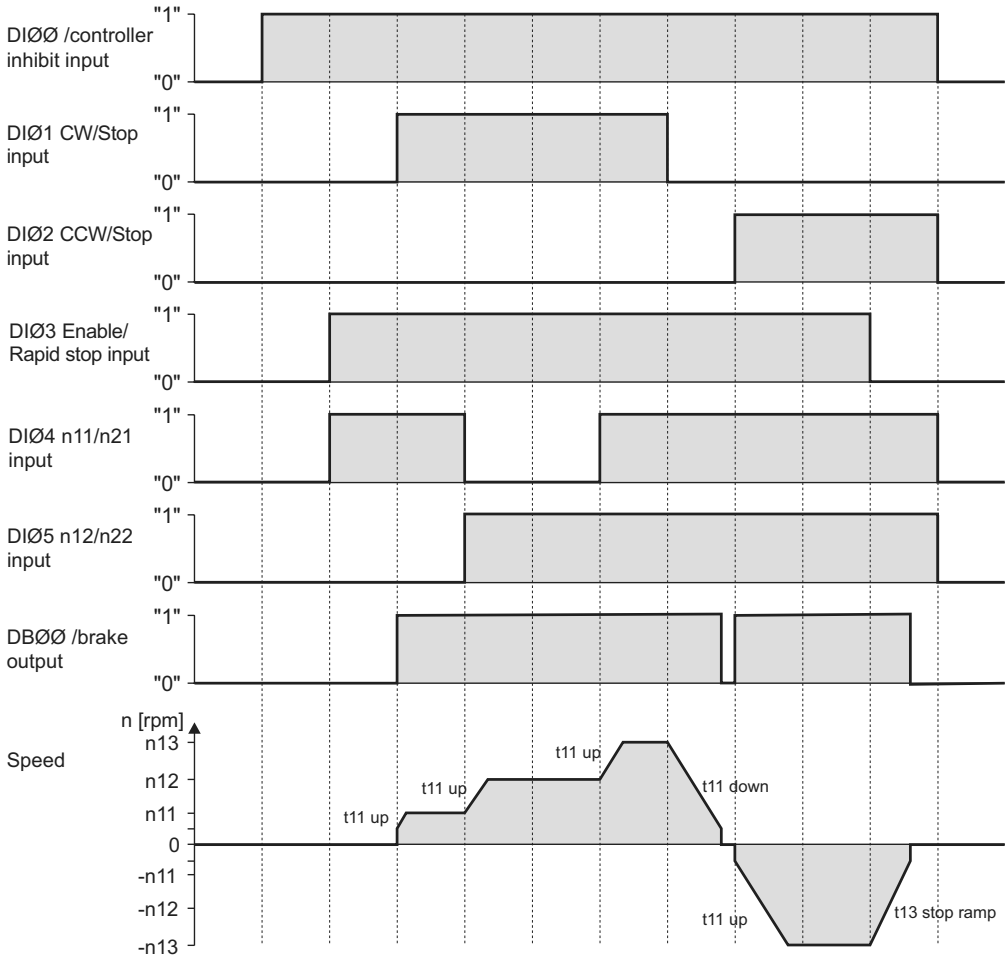

	NOTE
	The motor is not energized in the event of controller inhibit. A motor without brake will coast to standstill.

9.12.3 Manual operation

The inverter can be controlled using the DBG60B keypad in manual operation (Context menu → Manual operation). The 7-segment display on the unit shows "H" during manual operation.

The binary inputs are then without any functions for the duration of manual operation, with the exception of a /Controller inhibit. A binary input /Controller inhibit must be assigned a "1" signal to enable the drive to be started in manual operation.

The direction of rotation is not determined by the "CW/stop" or "CCW/stop" binary inputs. Instead, you select the direction of rotation using the DBG60B keypad. Enter the required speed and then the direction of rotation (+ = CW/– = CCW) using the sign key (+/–).

Manual operation remains active when the power supply is switched off and on; however, the inverter is then inhibited. Use the "Run" key to enable and start the inverter at n_{min} in the selected direction of rotation. The speed is increased and decreased using the ↑ and ↓ keys.

NOTE

The signals at the binary inputs take effect as soon as manual operation is finished. A binary input /Controller inhibit does not have to be switched from "1" to "0" and back to "1". The drive can start according to the signals at the binary inputs and the setpoint sources.

⚠ HAZARD

Risk of crushing if the motor starts up unintentionally.

Severe or fatal injuries

- Ensure that the motor cannot start inadvertently, for example, by removing the electronics terminal block X12.
- Additional safety precautions must be taken depending on the application to avoid injury to people and damage to machinery.

9.13 Parameter list

All parameters that can also be displayed and edited using the keypad are indicated as follows in the "FBG" (keypad) column:

- Long: Selection in long menu
- Short: Selection in short or long menu
- Selection using symbols on keypad
- Selection within FBG motor startup

If a selection is offered, the factory setting is indicated in **bold**.

No.	FBG	Index dec.	Name	Range / Factory setting		Value after startup
				Display	MOVITOOLS® MotionStudio	
0__			**Display values** (read only)			
00_			**Process values**			
000		8318	Speed (signed)		[rpm]	
002		8319	Frequency (signed)		[Hz]	
004		8321	Output current (amount)		[% I_{Rated}]	
005		8322	Active current (signed)		[% I_{Rated}]	
008	Short	8325	DC link voltage		[V]	
009		8326	Output current		[A]	
01_			**Status displays**			
010		8310	Inverter status		[Text]	
011		8310	Operating status		[Text]	
012		8310	Fault status		[Text]	
013		8310	Current parameter set		Current parameter set	
014	Long	8327	Heat sink temperature		[°C]	
02_			**Analog setpoints**			
020	Long	8331	Analog input AI1		[V]	
021	Long	8332	Analog input AI2 (optional)		[V]	
03_			**Binary inputs**			
030		8844	Binary input DI00		**Fault reset**	
031		8335	Binary input DI01		CW / STOP (fixed assignment)	
032		8336	Binary input DI02		**CCW / STOP**	
033		8337	Binary input DI03		**Enable / stop**	
034		8338	Binary input DI04		**n11 / n21**	
035		8339	Binary input DI05		**n12 / n22**	

No.	FBG	Index dec.	Name	Range / Factory setting		Value after startup
				Display	MOVITOOLS® MotionStudio	
039	Lonb	8334	Binary inputs DI00 ... DI05		Binary display	
05_			**Binary outputs**			
051		8349	Binary output DO01		**/Fault**	
052		8349	Binary output DO02		**Brake released**	
053		8349	Binary output DO03		**Ready for operation**	
059	Lonb	8349	Binary outputs DO01 ... DO03		Binary display	
07_			**Unit data**			
070		8301	Unit type		[Text]	
071		8361	Rated output current		[A]	
076		8300	Firmware basic unit		[Part number and version]	
077		–	DBG firmware		Only in DBG60B	
08_			**Fault memory**			
080 ... 084	Lonb	8366 ... 8370	Error t-0 ... t-4	Fault code	Background information for previous faults.	
09_			**Bus diagnostics**			
094	Lonb	8455	PO1 setpoint		[hex]	
095	Lonb	8456	PO2 setpoint		[hex]	
096	Lonb	8457	PO3 setpoint		[hex]	
097		8458	PI1 actual value		[hex]	
098		8459	PI2 actual value		[hex]	
099		8460	PI3 actual value		[hex]	
1__			**Setpoints / Integrators** (on FBG only parameter set 1)			
10_			**Setpoint selection / Frequency input**			
100	Short	8461	Setpoint source	0 **1** 2 4 6 7 10 11 14	Bipolar / Fixed setpoint **Unipolar / Fixed setpoint** RS 485 / Fixed setpoint Motor potentiometer / Fixed setpoint Fixed setpoint + AI1 Fixed setpoint * AI1 SBus 1 / Fixed setpoint Frequency setpoint input / Fixed setpoint Bipolar AI2 / Fixed setpoint	
101	Short	8462	Control signal source	**0** 1 3 4	**Terminals** RS-485 SBus 1 3 wire control	
102	Lonb	8840	Frequency scaling	0.1 ... **10** ... 120.00 [kHz]		
103	Lonb	10247.15	FI1 reference	**0** 1	**n_{max}** n_{ref}	

No.	FBG	Index dec.	Name	Range / Factory setting		Value after startup
				Display	MOVITOOLS® MotionStudio	
104	Lonb	10247.10	Setpoint reference speed $n_{ref.}$	0 ... **3000** ... 6000 rpm		
105	Lonb	10416.1	Open circuit detection	0 2 4 **7**	No response Immediate stop / fault Rapid stop / fault **Rapid stop / warning**	
106	Lonb	10247.11	FI1 characteristic curve x1	**0** ... 100 %		
107	Lonb	10247.12	FI1 characteristic curve y1	–100 % ... **0** ... +100 %		
108	Lonb	10247.13	FI1 characteristic curve x2	0 ... **100 %**		
109	Lonb	10247.14	FI1 characteristic curve y2	–100 % ... 0 ... **+100 %**		
11_			**Analog input 1 (0 ... 10 V)**			
110	Short	8463	AI1 scaling	0.1 ... **1** ... 10		
112	Short	8465	AI1 operating mode	**1** 5 6 7 8 9	**10 V, reference maximum speed** 0 – 20 mA, reference maximum speed 4 – 20 mA, reference maximum speed 0 – 10 V, n-reference 0 – 20 mA, n-reference 4 – 20 mA, n-reference	
113	Lonb	8466	AI1 voltage offset	–10 V ... **0** ... +10 V		
116	Short	10247.6	AI1 characteristic curve x1	**0** ... 100 %		
117	Short	10247.7	AI1 characteristic curve y1	–100 % ... **0** ... +100 %		
118	Short	10247.8	AI1 characteristic curve x2	0 ... **100 %**		
119	Short	10247.9	AI1 characteristic curve y2	–100 % ... 0 ... **+100 %**		
12_			**Analog input AI2 / FBG setpoint control module (option)**			
120	Lonb	8469	AI2 operating mode	**0** 1 2	**No function** 0 ... ±10 V + Setpoint 0 ... 10 V current limitation	
121	Short	8811	Addition FBG setpoint control module	**0** 1 2	**Off** On On (without fixed setpoint)	
122	Short	8799	Direction of rotation FBG manual operation	**0** 1 2	**Unipolar CW** Unipolar CCW Bipolar CW and CCW	
126	Lonb	10247.1	AI2 characteristic curve x1	–100 % ... **0** ... +100 % (–10 V ... **0** ... +10 V)		
127	Lonb	10247.2	AI2 characteristic curve y1	–100 % ... **0** ... +100 % ($-n_{max}$ ... **0** ... $+n_{max}$ / **0** ... I_{max})		
128	Lonb	10247.3	AI2 characteristic curve x2	–100 % ... 0 ... **+100 %** (–10 V ... 0 ... +**10 V)**		
129	Lonb	10247.4	AI2 characteristic curve y2	–100 % ... 0 ... **+100 %** ($-n_{max}$ ... 0 ... $+\mathbf{n_{max}}$ / 0 ... $\mathbf{I_{max}}$)		

No.	FBG	Index dec.	Name	Range / Factory setting		Value after startup
				Display	MOVITOOLS® MotionStudio	
13_ / 14_			**Speed ramps 1 / 2**			
130 / 140		8807 / 9264	Ramp t11 / t21 up	0.1 ... **2** ... 2000 [s]		
131 / 141		8808 / 9265	Ramp t11 / t21 down	0.1 ... **2** ... 2000 [s]		
134 / 144		8474 / 8482	Ramp t12 / t22	0.1 ... **10** ... 2000 [s]		
136 / 146		8476 / 8484	Stop ramp t13 / t23	0.1 ... **2** ... 20 [s]		
139 / 149		8928 / 8929	Ramp monitoring 1 / 2	0 on 1 off	YES **NO**	
15_			**Motor potentiometer function**			
150		8809	Ramp t3 up = down	0.2 ... **20** ... 50 [s]		
152		8488	Save last setpoint	**off** on	**Off** On	
16_ / 17_			**Fixed setpoints**			
160 / 170		8489 / 8492	Internal setpoint n11 / n21	0 ... **150** ... 5000 [rpm]		
161 / 171		8490 / 8493	Internal setpoint n12 / n22	0 ... **750** ... 5000 [rpm]		
162 / 172		8491 / 8494	Internal setpoint n13 / n23	0 ... **1500** ... 5000 [rpm]		
163 / 173		8814 / 8817	n11/n21 PI controller	0 ... **3** ... 100 [%]		
164 / 174		8815 / 8818	n12/n22 PI controller	0 ... **15** ... 100 [%]		
165 / 175		8816 / 8819	n13/n23 PI controller	0 ... **30** ... 100 [%]		
2__			**Controller parameters**			
25_			**PI controller**			
250		8800	PI controller	**0** 1 2	**Off** Normal Inverted	
251		8801	P-gain	0 ... **1** ... 64		
252		8802	I-component	0 ... **1** ... 2000 [s]		
253		8465	PI actual value mode	**1** 5 6 7 8 9	**10 V, reference maximum speed** 0 – 20 mA, reference maximum speed 4 – 20 mA, reference maximum speed 0 – 10 V, n-reference 0 – 20 mA, n-reference 4 – 20 mA, n-reference	
254		8463	PI actual value scaling	0.1 ... **1.0** ... 10.0		
255		8812	PI actual value offset	**0.0** ... 100.0 [%]		

No.	FBG	Index dec.	Name	Range / Factory setting		Value after startup
				Display	MOVITOOLS® MotionStudio	
3__			**Motor parameters** (on FBG only parameter set 1)			
30_ / 31_			**Limits 1 / 2**			
300 / 310	Lonb	8515 / 8519	Start/stop speed 1 / 2	0 ... **150** [rpm]		
301 / 311	Lonb	8516 / 8520	Minimum speed 1 / 2	0 ... **15** ... 5500 [rpm]		
302 / 312		8517 / 8521	Maximum speed 1 / 2	0 ... **1500** ... 5500 [rpm]		
303 / 313	Lonb	8518 / 8522	Current limit 1 / 2	0 ... **150** [% I_{Rated}]		
32_ / 33_			**Motor adjustment 1 / 2**			
320 / 330	Lonb	8523 / 8528	Automatic adjustment 1 / 2	off **on**	Off **On**	
321 / 331	Lonb	8524 / 8529	Boost 1 / 2	0 ... 100 [%]		
322 / 332	Lonb	8525 / 8530	IxR Compensation 1 / 2	0 ... 100 [%]		
323 / 333	Lonb	8526 / 8531	Pre-magnetization time 1 / 2	0 ... 2 [s]		
324 / 334	Lonb	8527 / 8532	Slip compensation 1 / 2	0 ... 500 [rpm]		
325	Lonb	8834	No-load damping	**off** on	**Off** On	
34_			**I_{Rated} UL monitoring**			
345 / 346	Lonb	9114 / 9115	I_{Rated} UL monitoring 1 / 2	0.1 ... 500 A		
4__			**Reference messages**			
40_			**Speed reference message**			
400	Lonb	8539	Speed reference value	0 ... **750** ... 5000 [rpm]		
401	Lonb	8540	Hysteresis	0 ... **100** ... +500 [rpm]		
402	Lonb	8541	Delay time	0 ... **1** ... 9 [s]		
403	Lonb	8542	Message = "1" if:	**0** 1	**n < n_{ref}** n > n_{ref}	
45_			**PI controller reference message**			
450	Lonb	8813	PI actual value reference			
451	Lonb	8796	Message = "1" if:	0 **1**	PI Actual value < PI ref **PI Actual value > PI ref**	
5__			**Monitoring functions** (on FBG only parameter set 1)			
50_			**Speed monitoring 1 / 2**			
500 / 502	Lonb	8557 / 8559	Speed monitoring 1 / 2	**0** 3	**Off** Motor / regenerative	
501 / 503	Lonb	8558 / 8560	Delay time 1 / 2	0 ... **1** ... 10 [s]		

No.	FBG	Index dec.	Name	Range / Factory setting		Value after startup
				Display	MOVITOOLS® MotionStudio	
6__			**Terminal assignment**			
60_			**Binary inputs**			
601	Short	8336	Binary input DI02 assignment		0: No function 1: Enable / stop (factory setting DI03) 2: CW / stop 3: CCW / stop (factory setting DI02) 4: n11 / n21 (factory setting DI04) 5: n12 / n22 (factory setting DI05) n13 = n11 + n12 6: Fixed setpoint switchover 7: Parameter set switchover 8: Ramp switchover 9: Motor potentiometer up 10: Motor potentiometer down 11: /External fault 12: Fault reset (factory setting DI00) 20: Setpoint acceptance active 26: TF message (only with DI05) 30: Controller inhibit	
602	Short	8337	Binary input DI03 assignment			
603	Short	8338	Binary input DI04 assignment			
604	Short	8339	Binary input DI05 assignment			
608	Short	8844	Binary input DI00 assignment			
62_			**Binary outputs**			
620	Short	8350	Binary output DO01 assignment		0: No function 1: /Fault (factory setting DO01) 2: Ready (factory setting DO03) 3: Output stage on 4: Rotating field on 5: Brake released (factory setting DO02 / not with DO03) 8: Parameter set 9: Speed reference message 11: Comparison message setpoint-actual value 21: IPOS output 22: /IPOS fault 23: PI controller actual value reference 24: Ex-e current limit active (in preparation)	
621	Short	8351	Binary output DO02 assignment			
622	Short	8916	Binary output DO03 assignment			
64_			**Analog outputs AO1** (optional)			
640	Long	8568	Analog output AO1	**0** 1 2 3 4 5 6 7 11 12	**No function** Ramp generator input Setpoint speed Actual speed Actual frequency Output current Active current Unit utilization Actual speed (signed) Actual frequency (signed)	
641	Long	10248.5	AO1 reference	**0** 1 2	**3000 rpm, 100 Hz, 150 %** n_{max} $n_{set\ ref.}$	
642	Long	8570	AO1 operating mode	**0** 2 3 4	**No function** 0 ... 20 mA 4 ... 20 mA 0 ... 10 V	
646	Long	10246.1	AO1 characteristic curve x1	–100 % ... **0** ... +100 %		
647	Long	10246.2	AO1 characteristic curve y1	**0** ... 100 %		

No.	FBG	Index dec.	Name	Range / Factory setting		Value after startup
				Display	MOVITOOLS® MotionStudio	
648	Lonb	10246.3	AO1 characteristic curve x2	–100 % ... 0 ... **+100 %**		
649	Lonb	10246.4	AO1 characteristic curve y2	0 ... **100 %**		
7__			**Control functions** (on FBG only parameter set 1)			
70_			**Operating modes 1 / 2**			
700 / 701		8574 / 8575	Operating mode 1 / 2	0 2 3 4 **21** 22	VFC VFC & hoist VFC & DC braking VFC & flying start function **V/f characteristic curve** V/f & DC braking	
71_			**Standstill current 1 / 2**			
710 / 711	Lonb	8576 / 8577	Standstill current 1 / 2	**0** ... 50 % I_{Mot}		
72_			**Setpoint stop function 1 / 2**			
720 / 723	Lonb	8578 / 8581	Setpoint stop function 1 / 2	**off** on	**Off** On	
721 / 724	Lonb	8579 / 8582	Stop setpoint 1 / 2	0 ... **30** ... 500 [rpm]		
722 / 725	Lonb	8580 / 8583	Start offset 1 / 2	0 ... **30** ... 500 [rpm]		
73_			**Brake function 1 / 2**			
731 / 734	Lonb	8749 / 8750	Brake release time 1 / 2	**0** ... 2 [s]		
732 / 735	Lonb	8585 / 8587	Brake application time 1 / 2	0 ... 2 [s]		
74_			**Speed skip function**			
740 / 742	Lonb	8588 / 8590	Skip window center 1 / 2	0 ... **1500** ... 5000 rpm		
741 / 743	Lonb	8589 / 8591	Skip width 1 / 2	**0** ... 300 rpm		
76_			**Manual operation**			
760	Lonb	8798	Lock RUN / STOP buttons	**off** on	**Off** On	
77_			**Energy-saving function**			
770	Lonb	8925	Energy-saving function	**off** on	**Off** On	
8__			**Unit functions** (on FBG only parameter set 1)			
80_			**Setup**			
800	Short	–	Short menu	Long **Short**		
802	Lonb	8594	Factory setting	**no** Std ALL 4	**0 / No** 1 / Standard 2 / IEC delivery status 4 / NEMA delivery status	
803	Lonb	8595	Parameter lock	**off** on	**Off** On	

No.	FBG	Index dec.	Name	Range / Factory setting		Value after startup
				Display	MOVITOOLS® MotionStudio	
804		8596	Reset statistical data		**No action** Fault memory	
806		–	Copy DBG → MOVITRAC® B		Yes **No**	
807		–	Copy MOVITRAC® B → DBG		Yes **No**	
81_			**Serial communication**			
810	LonB	8597	RS-485 address	**0** ... 99		
811		8598	RS-485 group address	**100** ... 199		
812		8599	RS-485 timeout delay	**0** ... 650 [s]		
82_			**Brake operation 1 / 2**			
820 / 821		8607 / 8608	4-quadrant operation 1 / 2	off **on**	Off **On**	
83_			**Fault responses**			
830	LonB	8609	Response terminal "external fault"	2 **4** **7**	Immediate stop / fault **Rapid stop / fault** (830) **Rapid stop / warning** (833 / 836)	
833	LonB	8612	Response timeout RS-485			
836	LonB	8615	Response timeout SBus			
84_			**Reset behavior**			
840		8617	Manual reset		Yes **No**	
86_			**Modulation 1 / 2**			
860 / 861	LonB	8620 / 8621	PWM frequency 1 / 2	**4** 8 12 16	**4 kHz** 8 kHz 12 kHz 16 kHz	
862 / 863	LonB	8751 / 8752	PWM fix 1 / 2	On **Off**	On **Off**	
87_			**Process data parameter setting**			
870	LonB	8304	Setpoint description PO1		**No function** (factory setting P872) **Set speed** (factory setting P871) Max. speed Ramp **Control word 1** (factory setting P870) Control word 2 Set speed [%] IPOS PO data PI controller setpoint [%]	
871	LonB	8305	Setpoint description PO2			
872	LonB	8306	Setpoint description PO3			
873	LonB	8307	Actual value description PI1		No function **Actual speed** (factory setting P874) **Output current** (factory setting P875) Active current **Status word 1** (factory setting P873) Actual speed [%] IPOS PI-DATA PI controller actual value [%]	
874	LonB	8308	Actual value description PI2			
875	LonB	8309	Actual value description PI3			

No.	FBG	Index dec.	Name	Range / Factory setting		Value after startup
				Display	MOVITOOLS® MotionStudio	
876	LonB	8622	PO data enable		No **Yes**	
88_			**Serial communication SBus**			
880	LonB	8937	SBus protocol	**0 / MoviLink** 1 / CANopen		
881	Short	8600	SBus address	**0** ... 63		
882		8601	SBus group address	**0** ... 63		
883	LonB	8602	SBus timeout delay	**0** ... 650 [s]		
884	LonB	8603	SBus baud rate	125 250 **500** 1000	125 kBaud 250 kBaud **500 kBaud** 1 MBaud	
886	LonB	8989	CANopen address	1 ... **2** ... 127		

10 Operation

10.1 Data backup

10.1.1 Data backup with FBG11B

Use the FBG11B keypad to download parameter data from the MOVITRAC® B to the keypad or copy from the keypad to the MOVITRAC® B.

After copying the parameters, check for accuracy.

Data backup with FBG11B

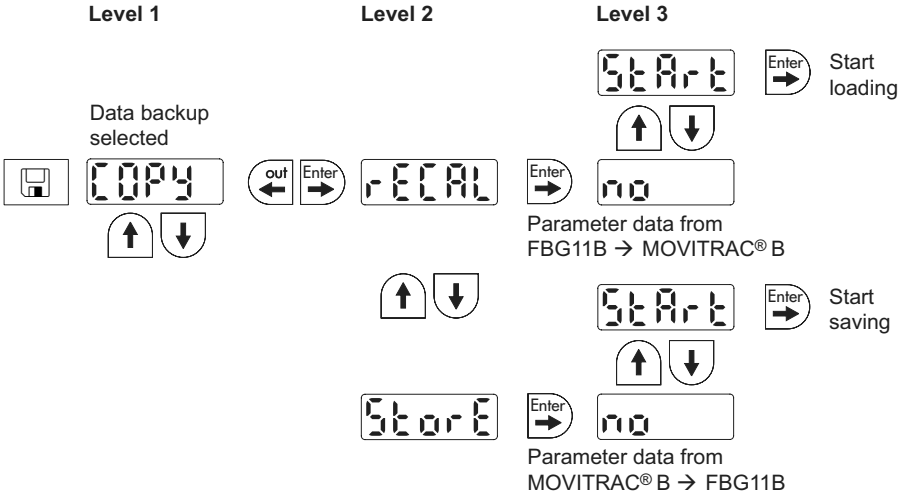

After copying data, the MOVITRAC® B is inhibited. The inhibited status is indicated by a flashing STOP in the status display. The status LED also slowly flashes yellow.

You can lift the inhibit by taking one of the following measures:

- Pressing the RUN button on the FBG11B
- Switching the mains off, waiting 10 seconds, and switching the mains back on

10.1.2 Data backup with DBG60B

Copy the parameter set from MOVITRAC® B to the DBG60B keypad. You have the following options:

- In the context menu, select the "COPY TO DBG" menu item. Confirm your selection by selecting OK. The parameter set is copied from MOVITRAC® B to the DBG60B.
- In the context menu, select the "PARAMETER MODE" menu item. Select parameter P807 "MCB → DBG". The parameter set is copied from MOVITRAC® B to the DBG60B.

10.1.3 Data backup with UBP11A

Copy the parameter set from MOVITRAC® B to the UBP11A parameter module. In addition, press the button at the lower end of the module. You need a pointed object to do so.

10.1.4 Data backup with MOVITOOLS® MotionStudio

When you use MOVITOOLS® MotionStudio to transfer data to the MOVITRAC® B frequency inverter, you must re-enable the inverter as follows:

- Select unit in the network.
- Right click to open the context menu.
- Select menu [RUN/STOP via software keypad] [1]
- Select [RUN] in the software keypad [2]

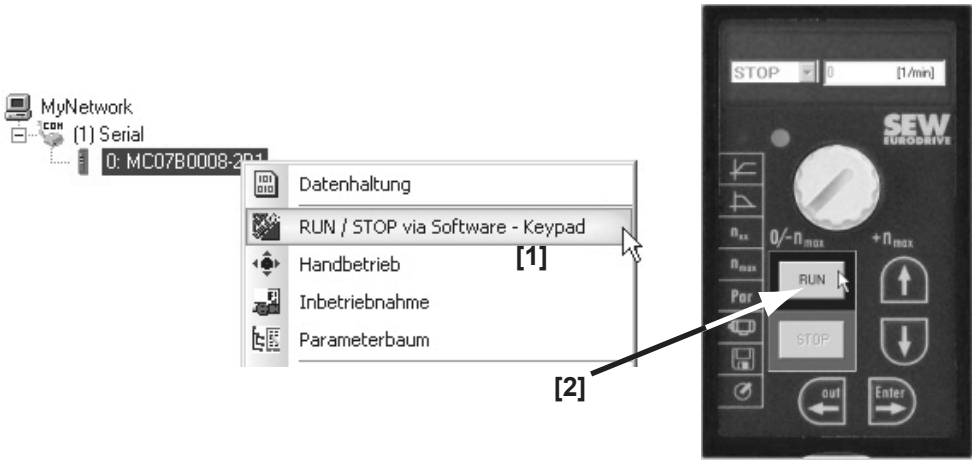

10.2 Return codes (r-19 ... r-38)

Return codes MOVITRAC® B:

No.	Description	Meaning
19	Parameter lock activated	Parameters cannot be changed
20	Factory setting in progress	Parameters cannot be changed
23	Option card missing.	The required option card for the function is missing
27	Option card missing.	The required option card for the function is missing
28	Controller inhibit required	Controller inhibit required
29	Invalid value for parameter.	• Invalid value for parameter. • FBG manual operation selection invalid as PC is in active manual operation.
32	Enable	You cannot perform this function in ENABLED status
34	Fault in sequence	• Fault when saving in FBG11B. • Startup did not occur with FBG. Perform FBG startup with MotionStudio or select a new motor.
38	FBG11B incorrect data set	Stored data set does not match the unit

10.3 Status displays

10.3.1 FBG keypad

If the status is "Drive enabled", the display will show the actual speed calculated.

State	Display
Drive "Controller inhibit"	oFF
Drive "No enable"	StoP
Drive "Enable"	8888 (Actual speed)
Factory setting	SEt (Set)
Standstill current	dc
24 V operation	24U
Timeout active	t

Status of the binary inputs / binary outputs

Parameter P039 (binary inputs) and parameter P059 (binary outputs) are adopted in the parameter menu as display parameters. The status is displayed as binary. Every binary input or output has two segments vertically on top of one another of the 7-segment display assigned to it. In this case, the upper segment lights up when the binary input or output is set, and the lower segment lights up when the binary input or output is not set. The two 7-segment displays on the right are displayed if P039 (di = binary inputs) or P059 (do = binary outputs) are output.

Examples:

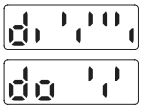

Above: Input status: DI00 = 1 / DI01 = 0 / DI02 = 1 / DI03 = 1 / DI04 = 1 / DI05 = 0

Bottom: Output status: DO01 = 1 / DO02 = 0 / DO03 = 1

10.3.2 LED flash codes

The LED on the front of the unit signals the following states:

State	Display (optional with FBG)	LED flash code status basic device
"ENABLE"	Speed	Constant green light
"ENABLE" at current limit	Speed	Rapid green flashing
"CURRENT AT STAND-STILL"	dc	Slow green flashing
Timeout	Errors 43 / 46 / 47	Flashing green/yellow
"NO ENABLE"	Stop	Constant yellow light
"FACTORY SETTING"	SEt	Rapid yellow flashing
"CONTROL.INHIBIT"	oFF	Rapid yellow flashing
"24 V operation"	Flashes 24U	Slow yellow flashing
"SAFE STOP"	Flashing U	Slow yellow flashing
FBG manual operation active or inverter stopped using "stop" button	FBG manual operation symbol or "stop" is flashing	Green on long, off briefly
Copy	Error 97	Flashing red/yellow
System fault	Errors 10 / 17 ... 24 / 25 / 32 / 37 / 38 / 45 / 77 / 94	Constant red light
Overvoltage / phase failure	Errors 4 / 6 / 7	Slow red flashing
Overload	Errors 1 / 3 / 11 / 44 / 84	Rapid red flashing
Monitoring	Errors 8 / 26 / 34 / 81 / 82	2 x red flashing
TF motor protection	Errors 31 / 84	3 x red flashing

10.4 Unit status codes

Use status word 1 to determine the unit status code.

Code	Meaning
0x0	Not ready
0x1	Controller inhibit
0x2	No enable
0x3	Standstill current active, no enable
0x4	Enable
0x8	Factory setting is active

10.5 Extended storage

If the unit is being stored for a long time, connect it to the mains voltage for at least 5 minutes every 2 years. Otherwise, the unit's service life may be shortened.

Handling electrolytic capacitors after long storage periods

All electrolytic capacitors can be stored deenergized without losing performance for at least two years. They can be loaded with rated voltage during this period.

After being stored for longer than two years, the connection response to high initial remaining currents is significant. After storage for two years, installed electrolytic capacitors are regenerated after one hour of interference-free operation of the connection (with maximum rated voltage) and can then be stored again.

Forming process

SEW-EURODRIVE recommends forming the electrolytic capacitors slowly to avoid excess gas formation inside the capacitors.

If capacitors are formed inside a unit, voltage should be conducted via a transformer to enable a slow and steady increase of voltage. Voltage should first be set at 0 V and then increased to the first forming voltage.

The following forming levels with respective dwell times are recommended:

- 0 – 100 % V_{rated_max}: 1 second
- 70 % V_{rated_max}: 15 minutes
- 85 % V_{rated_max}: 15 minutes
- 100 % V_{rated_max}: 1 hour

10.6 DBG60B keypad

10.6.1 Basic displays

0.00rpm 0.000Amp CONTROLLER INHIBIT	Display when /CONTROLLER INHIBIT = "0".
0.00rpm 0.000Amp NO ENABLE	Display when inverter is not enabled ("ENABLE/STOP" = "0").
950.00rpm 0.990Amp ENABLE (VFC)	Display for enabled inverter.
NOTE 6: VALUE TOO HIGH	Information message
(DEL)=Quit FAULT 9 STARTUP	Error display

10.6.2 Information messages

Information messages on the DBG60B (approx. 2 s in duration) or in MOVITOOLS®/ SHELL (message which can be acknowledged):

No.	Text DBG60B/SHELL	Description
1	ILLEGAL INDEX	Index addressed via interface not available.
2	NOT IMPLEMENT.	• Attempt to execute a function that is not implemented. • An incorrect communication service has been selected. • Manual operation selected via invalid interface (e.g. fieldbus).
3	READ ONLY VALUE	Attempt to modify a read only value.
4	PARAM. INHIBITED	Parameter lock P803 = "ON". Parameter cannot be altered.
5	SETUP ACTIVE	Attempt to change parameters when factory setting is active.
6	VALUE TOO HIGH	Attempt to enter a value that is too high.
7	VALUE TOO LOW	Attempt to enter a value that is too low.
8	REQ. CARD MISSING	The option card required for the selected function is missing.
–		
10	ONLY VIA ST1	Manual mode must be completed using X13:ST11/ST12 (RS 485).
11	ONLY TERMINAL	Manual mode must be exited via TERMINAL (DBG60B or UWS21B).
12	NO ACCESS	Access to selected parameter denied.
13	REG. INHIBIT MISSING	Set terminal DIØØ "/Controller inhibit" = "0" for the selected function.
14	INVALID VALUE	Attempt to enter an invalid value.
–		
16	PARAM. NOT SAVED	Overflow of EEPROM buffer, e.g., due to cyclic write access. Parameter is saved in EEPROM and is not protected against loss following POWER OFF.
17	INVERTER ENABLED	• Parameter to be changed can only be set in the state "CONTROLLER INHIBIT". • Attempt to change to manual mode during live operation.

10.6.3 Functions of the DBG60B keypad

Key assignments for DBG60B

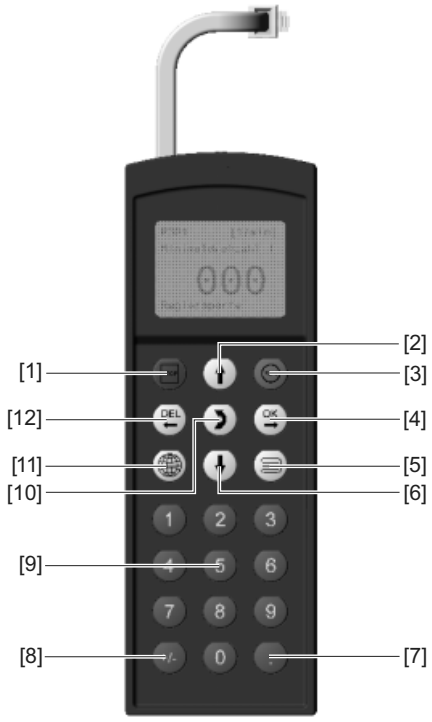

[1]	Stop key	Stop
[2]	↑ key	Up arrow, moves up to the next menu item
[3]	RUN key	Start
[4]	OK key	OK, confirms the entry
[5]	Context key	Activate the context menu
[6]	↓ key	Down arrow, moves down to the next menu item
[7]	. key	Decimal point
[8]	± key	Sign reversal
[9]	Keys 0 ... 9	Digits 0 ... 9
[10]	↔ key	Change menu
[11]	Language key	Select language
[12]	DEL key	Delete previous entry

Copy function of the DBG60B

You can use the DBG60B keypad to copy complete parameter sets from one MOVITRAC® unit to other MOVITRAC® units. Proceed as follows:

- In the context menu, select the menu item "COPY TO DBG". Confirm your selection by selecting OK.
- After the copying process has finished, plug the keypad in the other inverter.
- In the context menu, select the menu item "COPY TO MC07B". Confirm your selection by selecting OK.

Parameter mode

Proceed as follows to set the parameters in parameter mode:

1. Press the context key to activate the context menu. The first menu item is "PARAMETER MODE".

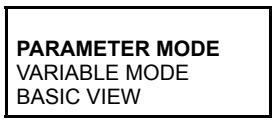

2. Press the OK key to start PARAMETER MODE. The first display parameter P000 "SPEED" appears. Use the ↑ or ↓ key to select main parameter groups 0 to 9.

3. Use the ↑ or ↓ key to select desired parameter group. The flashing cursor is positioned under the number of the main parameter group.

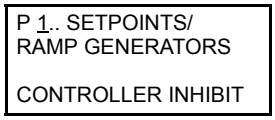

4. Press the OK key to activate parameter subgroup selection in the required main parameter group. The flashing cursor moves one position to the right.

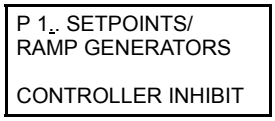

5. Use the ↑ or ↓ key to select desired parameter subgroup. The flashing cursor is positioned under the number of the parameter subgroup.

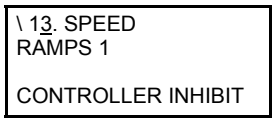

6. Press the OK key to activate parameter selection in the required parameter subgroup. The flashing cursor moves one position to the right.

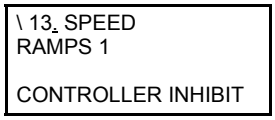

7. Use the ↑ or ↓ key to select desired parameter. The flashing cursor is positioned under the third digit of the parameter number.

8. Press the OK key to activate the setting mode for the selected parameter. The cursor is positioned under the parameter value.

9. Use the ↑ or ↓ key to set the desired parameter value.

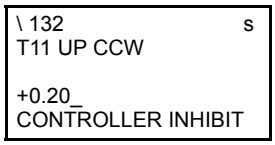

10. Press the OK key to confirm the setting use the ↔ key to exit setting mode. The flashing cursor is positioned under the third digit of the parameter number again.

11. Use the ↑ or ↓ key to select another parameter or press the DEL key to switch to the menu of the parameter subgroups.

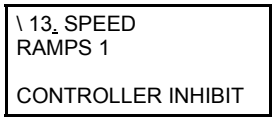

12. Use the ↑ or ↓ key to select another parameter subgroup or press the DEL key to switch to the menu of the main parameter groups.

P 1.. SETPOINTS/ RAMP GENERATORS CONTROLLER INHIBIT

13. Use the context key to return to the context menu.

PARAMETER MODE VARIABLE MODE BASIC VIEW

User menu

The DBG60B keypad has a standard user menu containing the parameters that are used most often. The parameters in the user menu are displayed with a "\" before the parameter number (see Sec. "Complete parameter list"). You can add or delete parameters. You can save a maximum of 50 parameter entries. The parameters are displayed in the order in which they are stored in the inverter. The parameters are not sorted automatically.

- Use the context key to call up the context menu. Select the menu item "USER MENU" and press the OK key to confirm. The user menu with the most frequently used parameters appears.

Adding parameters to the user menu

Proceed in this order to add parameters to the user menu:

- Use the context key to call up the context menu. Select the "PARAMETER MODE" menu item.
- Select desired parameter and press the OK key to confirm.
- Use the context key to return to the context menu. In the context menu, select the menu item "ADD Pxxx". "xxx" is the parameter you selected previously. Confirm your selection by selecting OK. The selected parameter is stored in the user menu.

Deleting parameters from the user menu

Proceed in this order to delete parameters from the user menu:

- Use the context key to call up the context menu. Select the menu item "USER MENU".
- Select the parameter that is to be deleted. Confirm your selection by selecting OK.
- Use the context key to return to the context menu. In the context menu, select the menu item "DELETE Pxxx". "xxx" is the parameter you selected previously. Confirm your selection by selecting OK. The selected parameter is deleted from the user menu.

Initial parameter

The wake up parameter is the parameter that is displayed when the DBG60B is switched on. The factory setting for the wake up parameter is the basic display. You can select which parameter should be the wake up parameter. The following options can be used as the wake up parameter:

- Parameter (→ Parameter mode)
- Parameter from the user menu (→ User menu)
- Basic display

Proceed as follows to save a wake-up parameter:

- First select the required parameter in parameter mode.
- In the context menu, select the menu item "XXXX INITIAL PARAM.". "XXXX" is the selected initial parameter. Confirm your selection by selecting OK.

11 Service / List of Faults

11.1 Device information

11.1.1 Fault memory

The inverter stores the error message in fault memory P080. The inverter does not save a new fault until the fault message has been acknowledged. The local operating panel shows the most recent fault. Whenever double faults occur, the value stored in P080 does not correspond to the value displayed on the operating panel. This is an example of what happens with F-07 DC link overvoltage followed by F34 Ramp timeout.

The inverter stores the following information when a malfunction occurs:

- Fault occurred
- Status of the binary inputs / binary outputs
- Operating status of the inverter
- Inverter status
- Heat sink temperature
- Speed
- Output current
- Active current
- Unit utilization
- DC link voltage

11.1.2 Switch-off responses

There are 3 switch-off responses depending on the error:

Response	Description
Immediate stop	This fault response causes immediate locking of the output stage with simultaneous control of the brake output so that an existing brake is applied. The "fault message" is set and the "ready message" is revoked. This fault status can only be exited by an explicit fault reset.
Stop	This fault response causes a stop at the set stop ramp. This fault stop is subject to time monitoring. If the drive does not reach the start / stop speed within a specified time period, the unit jumps to the fault state, the output stage is inhibited and an existing brake is applied. The fault message "F34 Ramp timeout" is generated. The original fault message is overwritten. If the drive reaches the start / stop speed, the unit jumps to the fault message, the brake is applied and the output stage is inhibited. The "fault message" is set and the "ready message" is revoked. This status can only be exited by an explicit fault reset.
Timeout (warning)	The shutdown response causes a stop at the set rapid stop ramp. The stop is subject to time monitoring as for the "fault stop". If the drive reaches the start / stop speed, the unit jumps to the warning state, the brake is applied and the output stage is inhibited. The "fault message" is set and the "ready message" remains set. An explicit fault reset is not possible. The fault is reset when communication is made again or the timeout is set to 0 s.

11.1.3 Reset basic unit

A fault message can be acknowledged by:

- Reset via input terminals with an appropriately assigned binary input (DIØØ, DIØ2...DIØ5). Factory setting for DIØØ is error reset.

11.1.4 Reset keypad

An error message can be acknowledged by:

- Manual reset on the keypad (STOP/RESET button).

The "STOP/RESET" button has priority over a terminal enable or an enable via the interface.

The STOP/RESET button can be used for performing a reset after a fault has occurred with a programmed error response. A reset inhibits the drive. To enable the drive, press the RUN key.

11.1.5 Reset interface

An error message can be acknowledged by:

- Manual reset in MOVITOOLS® (*P840 Manual reset* = *YES* or in status window of reset button).

11.1.6 Timeout active

If the inverter is controlled via a communication interface (RS-485 or SBus) and the mains power was switched off and back on again, the enable remains ineffective until the inverter once again receives valid data via the interface, which is monitored with a timeout.

11.1.7 Current limit

The operation LED will start flashing green when the current limit is reached.

11.2 Error list (F-00 ... F-113)

No.	Designation	Response	Possible cause	Measure
00	No fault			
01	Overcurrent	Immediate switch-off with inhibit	• Short circuit output • Output switching • Motor too large • Faulty output stage	• Rectify the short circuit • Switching with inhibited output stage only • Connect a smaller motor • Consult SEW Service if the fault still cannot be reset
03	Ground fault	Immediate switch-off with inhibit	• Ground fault in motor • Ground fault in inverter • Ground fault in the motor supply lead • Overcurrent (see F-01)	• Replace motor • Replace MOVITRAC® B • Eliminate ground fault • See F-01
04	Brake chopper	Immediate switch-off with inhibit	• Too much regenerative power • Braking resistor circuit interrupted • Short circuit in the braking resistor circuit • Brake resistor has too high resistance • Brake chopper defective • Ground fault	• Extend deceleration ramps • Check supply cable to the braking resistor • Rectify the short circuit • Check technical data of braking resistor • Replace MOVITRAC® B • Eliminate ground fault
06	Phase failure in supply system (only applies to 3-phase inverter)	Immediate switch-off with inhibit	• Phase failure • Supply voltage too low	• Check the supply system lead • Check the supply voltage
07	DC link overvoltage	Immediate switch-off with inhibit	• DC link voltage too high • Ground fault	• Extend deceleration ramps • Check supply cable to the braking resistor • Check technical data of braking resistor • Eliminate ground fault
08	Speed monitoring	Immediate switch-off with inhibit	Current controller works at the set limit due to: • Mechanical overload • Phase failure in supply system • Phase failure in motor Maximum speed for VFC operating modes exceeded	• Reduce load • Increase deceleration time setting P501 • Check current limitation • Extend deceleration ramps • Check mains phases • Check motor cable and motor • Reduce maximum speed
09	Startup fault	Immediate switch-off with inhibit	• Inverter not started yet • Unknown motor selected	• Start up the inverter • Select another motor
10	ILLOP	Stop with inhibit	• Wrong command during command execution • Incorrect conditions during command execution • Function does not exist / is not implemented in the inverter	• Check the program • Check program run • Use another function
11	Overtemperature	Stop with inhibit	Thermal overload of inverter	• Reduce load and / or ensure adequate cooling • If a braking resistor is integrated in the heat sink: Install braking resistor externally
17-24	System error	Immediate switch-off with inhibit	Malfunction of inverter electronics, possibly due to EMC influence	Check grounding and shielding and improve, if necessary. Contact SEW Service for advice if this reoccurs.

No.	Designation	Response	Possible cause	Measure
25	EEPROM	Stop with inhibit	Fault when accessing EEPROM	Activate factory settings, perform reset and reset parameters. Contact SEW Service for advice if this error reoccurs.
26	External terminal	Program-mable	Read in external fault signal via programmable input	Eliminate specific cause of fault; repro-gram terminal if necessary.
31	TF trip	Stop with inhibit	• Motor too hot, TF sensor has tripped • TF sensor of motor not connected or connected incorrectly • Connection of MOVITRAC® B and TF on motor interrupted	• Let motor cool off and reset fault • Check connections/links between MOVITRAC® B and TF
32	Index overflow	Emergency stop	Programming principles violated which leads to system-internal stack overflow	Check user program and correct it
34	Ramp timeout	Immediate switch-off with inhibit	• Set ramp time exceeded. • If you remove the inhibit and the drive exceeds the stop ramp time t13 by a certain time, the inverter will signal F34.	• Extend the ramp time • Extend the stop ramp time
36	Option missing	Immediate switch-off with inhibit	• Type of option card not allowed • Setpoint source, control signal source or operating mode not permitted for this option card	• Use correct option card • Set correct setpoint sourc. • Set correct control signal source • Set the correct operating mode
37	Watchdog timer	Immediate switch-off with inhibit	Error in system software sequence	Check grounding and shielding and improve, if necessary. Contact SEW Service for advice if this reoccurs.
38	System soft-ware	Immediate switch-off with inhibit	System error	Check grounding and shielding and improve, if necessary. Contact SEW Service for advice if this reoccurs.
43	RS-485 timeout	Stop without inhibit[1)]	Connection between inverter and PC interrupted	Check connection between inverter and PC.
44	Unit utilization	Immediate switch-off with inhibit	Unit utilization (Ixt value) exceeded	• Decrease power output • Extend ramps • If these points are not possible: Use a larger inverter
45	Initialization	Immediate switch-off with inhibit	Error during initialization	Contact SEW Service for advice
46	System bus 2 timeout	Stop without inhibit	Fault during communication via system bus	Check system bus connection
47	System bus 1 timeout	Stop without inhibit	Fault during communication via system bus	Check system bus connection
77	Control word	Stop with inhibit	System error	Contact SEW Service for advice
81	Start condition	Immediate switch-off with inhibit	**Only in "VFC hoist" operating mode:** The motor could not be supplied with the correct amount of current during the pre-magnetizing time: • Rated motor power too small in relation to rated inverter power • Motor cable cross-section too small	• Check connection between inverter and motor • Check startup data and perform new startup, if necessary • Check cross-section of motor cable and increase if necessary
82	Open output	Immediate switch-off with inhibit	**Only in "VFC hoist" operating mode:** • 2 or all output phases interrupted • Rated motor power too small in relation to rated inverter power	• Check connection between inverter and motor • Check startup data and perform new startup, if necessary

No.	Designation	Response	Possible cause	Measure
84	UL motor protection	Stop with inhibit	Motor utilization too high	• Check I_{Rated}-UL P345/346 monitoring • Reduce load • Extend ramps • Long pause times
94	EEPROM checksum	Immediate switch-off with inhibit	Defective EEPROM	Contact SEW Service
97	Copy error	Immediate switch-off with inhibit	• Parameter module is removed during copying process • Switching off/on during copying process	Prior to confirming the error: • Load factory setting or complete data set from parameter module
113	Analog input open circuit	Program-mable	AI1 analog input open circuit	Check wiring

1) No reset required, error message disappears after communication is reestablished

11.3 SEW electronics service

11.3.1 Hotline

Call the Drive Service Hotline to talk to an SEW-EURODRIVE service specialist on 365 days a year, 24 hours a day.

Simply dial the prefix (**0)1805** and then enter the key combination **SEWHELP**. Or simply dial +49 (**0) 18057394357**.

11.3.2 Repair service

Please contact the **SEW Electronics Service if you can not rectify a fault.**

Please always specify the unit status code number when you contact the SEW electronics service so that our service personnel can assist you more effectively.

Please provide the following information when sending the unit in for repair:
Serial number (→ nameplate)
Unit Designation
Short description of application (application, control via terminals or serial)
Connected motor (motor voltage, star or delta connection)
Nature of the error
Accompanying circumstances
Your own presumptions as to what has happened
Unusual events preceding the problem

Index

0...9

4-quadrant operation 1 (unit functions: brake operation) 102
4-quadrant operation 2 (unit functions: brake operation) 102

A

Active current (display value for process value) 81
Actual value description PI1 (unit functions: fieldbus parameter settings) 103
Actual value description PI2 (unit functions: fieldbus parameter settings) 103
Actual value description PI3 (unit functions: fieldbus parameter settings) 103
Addition setpoint generator of the keypad (setpoints from setpoint generator of the keypad) 90
Address CANopen (unit functions: serial communication SBus) 104
AI1 Operating mode (setpoints for analog input) 87
AI1 Scaling (setpoints for analog input) 87
Analog input AI1 86
Analog input AI1 (display value for analog setpoint) 82
Analog input AI2 82
Analog input AI2 (setpoint potentiometer) 89
Analog setpoints 82
Application examples 140
Applications 107
Automatic adjustment 94
Automatic adjustment 1 (motor parameter for motor adjustment) 94
Automatic adjustment 2 (motor parameter for motor adjustment) 94
Auxiliary supply output 19

B

Baud rate 74, 76, 77
Binary input DI00 (display value of binary input) 82
Binary input DI00 (terminal assignment of binary inputs) 96
Binary input DI01 (display value of binary input) 82
Binary input DI02 (display value of binary input) 82
Binary input DI02 (terminal assignment of binary inputs) 96
Binary input DI03 (display value of binary input) 82
Binary input DI03 (terminal assignment of binary inputs) 96
Binary input DI04 (display value of binary input) 82
Binary input DI04 (terminal assignment of binary inputs) 96
Binary input DI05 (display value of binary input) 82
Binary input DI05 (terminal assignment of binary inputs) 96
Binary inputs 19, 82, 96
Binary inputs DI00 ... DI05 (display value for binary inputs) ... 82
Binary output 19
Binary output DO01 (display value of binary output) 82
Binary output DO01 (terminal assignment for binary outputs) 97
Binary output DO02 (display value of binary output) 82
Binary output DO02 (terminal assignment for binary outputs) 97
Binary output DO03 (display value of binary output) 82
Binary output DO03 (terminal assignment for binary outputs) 97
Binary outputs 82, 96
Binary outputs DO01 ... DO03 (display value for binary outputs) 82
Boost 94
Boost 1 (motor parameter for motor adjustment) 94
Boost 2 (motor parameter for motor adjustment) 94
Brake application time 1 (control functions brake function) .. 101
Brake application time 2 (control functions brake function) .. 101
Brake connection 118
Brake operation 102
Brake rectifier connection 166
Brake release time 1 (control functions brake function) 101
Brake release time 2 (control functions brake function) 101
Braking resistor connection 150, 165
Braking resistor, Project planning 113
Bus diagnostics 83
Bus termination 74, 75
BW braking resistor 50

C

C-Tick 17
Cable cross-section 19, 120
Cable cross-sections 149
Cable duct 149
Cable length RS-485 170
Cable length, SBus 169
Cable lengths 123, 149
Cable specification, SBus 167
CANopen 72
CE marking 17
Churning losses 109
Cold plate, installation 161
Connection technology 74, 75, 77
Connector
X31 binary inputs and outputs 79
Contactor 149
Control functions 14, 98
Control signal source (setpoints for setpoint selection) 84
Controller parameters 92
Copy parameter data 205
Core cross-section 120
Coupling relays 133
CSA 17
cUL 17
Current limit 216
Current limit 1 (motor parameter limits) 93
Current limit 2 (motor parameter limits) 93
Current parameter set (display value for status display) 82

D

Data backup 205
DBG60B
Delivery condition 184
Language selection 184
Startup procedure 186
DBG60B keypad
Copy function 211
Description 42
Functions for startup 185
Functions of the keys. 211
Information messages 210
Initial parameter 214
Parameter mode 212
User menu 213
DC Link voltage (display value for process value) 81
Degree of protection of braking resistors 51
Delay time (reference messages: speed reference message) 95
Delay time 1 (monitoring functions: speed monitoring) 95
Device information 215
DeviceNet 72
DHP11B control card
LEDs 79
Differential input 19
Dimension drawings
DBG60B keypad 43
Housing for DBG60B 44
Display values 81
DP configuration 74
DP ID number 74
Dynamic applications 109

E

Earth-leakage current 18
Earth-leakage monitor 119, 149
Electromagnetic compatibility (EMC) 17
Electronics cables 133
Electronics data 19
Electronics service 219
Electronics shield clamps, Installation 157

EMC 17
EMC limit values 150
Enabling the direction of rotation 180
Enclosure 18
External setpoint selection 180
External setpoint specification 179
External voltage supply 19

F

Factory setting 102
Factory setting (unit functions: setup) 102
Fault memory 82, 215
Fault responses 102
Fault status (display value for status display) 82
Fault t-0...t-4 (display value for fault memory) 82
FBG manual operation (setpoints from setpoint generator of the keypad) 90
FBG11B 39
FBG11B keypad 39
FBG11B keypad front option 39
Features 13
Fieldbus gateways 72
Fieldbus parameter settings 103
FIO11B analog module 41
Firmware basic unit (display value for unit data) 82
Fixed setpoints 92
Flash codes 208
Flat design, braking resistor 51
Flat-design resistor for submounting 58, 59
Flat-design resistor for support rail mounting 58, 59
Frequency (display value for process value) 81
Frequency scaling (setpoints for setpoint selection) 85
FSC11B 40
FSC11B communication 40
FSC11B communication front option 40
Functions 13
Fuse 120

G

Group drive 125
GSD file 74, 75

H

HD output choke 65
Heat sink temperature 111
Heat sink temperature (display value for status display) 82
HF output filter 68, 153
Connection 130
Hoists 107
Hysteresis 139
Hysteresis (reference messages: speed reference message) 95

I

I-Component (controller parameter PI controller) 92
Ident number 74
Immediate stop 215
Immediate stop/Fault 85, 102
Information messages on the DBG60B 210
Inhibit 215
Initial parameter 214
Installation
PE connection 151
Installation altitude 18
Installation notes 149
INTERBUS 72
Interference emission 18, 128, 150
Interference immunity 18, 128
Internal setpoint n11 (setpoints for fixed setpoints) 92
Internal setpoint n12 (setpoints for fixed setpoints) 92
Internal setpoint n13 (setpoints for fixed setpoints) 92
Internal setpoint n21 (setpoints for fixed setpoints) 92
Internal setpoint n22 (setpoints for fixed setpoints) 92
Internal setpoint n23 (setpoints for fixed setpoints) 92
Inverter/motor combinations 110
Irated-UL monitoring 1 (motor parameter for motor adjustment) 94
Irated-UL monitoring 2 (motor parameter for motor adjustment) 94
IT system 119, 129, 149
IT system, installation 161
IxR Compensation 94
IxR Compensation 1 (motor parameter for motor adjustment) 94
IxR Compensation 2 (motor parameter for motor adjustment) 94

K

Keypad 176
Keypad, basic operation 177
Keypad, startup 181
Keypad, status displays 207

L

LED, flash codes 208
LEDs 79
Limit value class 128
Limit value class B cable conducted 150
Limits 93
Line choke 151
Line chokes 126
Line filter 150
List of errors 217
Locking run/stop keys (control functions manual operation) 101
Low output frequencies 112
Low voltage directive 17

M

Mains contactor 119, 151
Manual operation 101
Manual reset (unit functions: reset behavior) 103
Manual setpoint control module 179
Manual speed control module 179
Maximum speed 1 (motor parameter limits) 93
Maximum speed 2 (motor parameter limits) 93
MBG11A 45
Message = "1" for (reference message: PI controller reference message) 95
Message = "1" for (reference messages: speed reference message) 95
Minimum clearance 149
Minimum speed 1 (motor parameter limits) 93
Minimum speed 2 (motor parameter limits) 93
Modulation 103
Monitoring functions 95
MotionStudio 16
Motor adjustment 94
Motor cable 119, 149
Motor cable length 123
Motor cable, voltage drop 124
Motor parameters 93
Motor potentiometer 92
Motor selection 109
Mounting position 149
MOVITOOLS® 16
MOVITOOLS® MotionStudio 189
Multi-motor drive 183

N

ND line choke 60, 151
NF line filter 62, 152
No load damping (motor parameter for motor adjustment) 94

O

Operating mode 18
Operating mode 1 (control functions operating mode) 99
Operating mode 2 (control functions operating mode) 99
Operating modes 98
Operating status (display value for status display) 82
Output current (display value for process value) 81

Output current (display value for status display) 82
Output frequency, load capacity 112
Overload capacity 111
Overvoltage class 18

P

P-gain (controller parameter PI controller) 92
P0__ Display values 81
P00 Process values 81
P000 Speed (display value for process value) 81
P002 Frequency (display value for process value) 81
P004 Output current (display value for process value) 81
P005 Active current (display value for process value) 81
P008 DC Link voltage (display value for process value) 81
P009 Output current (display value for process value) 81
P01 Status displays 82
P010 Inverter status (display value for status display) 82
P011 Operating status (display value for status display) 82
P012 Fault status (display value for status display) 82
P013 Current parameter set (display value for status display) 82
P014 Heat sink temperature (display value for status display) 82
P02 Analog setpoints 82
P020 Analog input AI1 (display value for analog setpoint) 82
P021 Analog input AI2 82
P03 Binary inputs 82
P030 Binary input DI00 (display value of binary input) 82
P031 Binary input DI01 (display value of binary input) 82
P032 Binary input DI02 (display value of binary input) 82
P033 Binary input DI03 (display value of binary input) 82
P034 Binary input DI04 (display value of binary input) 82
P035 Binary input DI05 (display value of binary input) 82
P039 Binary inputs DI00 ... DI05 (display value for binary inputs) 82
P05 Binary outputs 82
P051 Binary output DO01 (display value of binary output) 82
P052 Binary output DO02 (display value of binary output) 82
P053 Binary output DO03 (display value of binary output) 82
P059 Binary outputs DO01 ... DO03 (display value for binary outputs) 82
P07 Unit data 82
P070 Unit type (display value for unit data) 82
P071 Rated output current (display value for unit data) 82
P076 Firmware basic unit (display value for unit data) 82
P08_ Error memory 82
P080 ... P084 Fault t-0...t-4 (display value for fault memory) 82
P09 Bus diagnostics 83
P094 PO 1 Setpoint (display value for bus diagnostics) 83
P095 PO 2 Setpoint (display value for bus diagnostics) 83
P096 PO 3 Setpoint (display value for bus diagnostics) 83
P097 PI 1 Setpoint (display value for bus diagnostics) 83
P098 PI 2 Setpoint (display value for bus diagnostics) 83
P099 PI 3 Setpoint (display value for bus diagnostics) 83
P1__ Setpoints/ramp generators 83
P10_ Setpoint preselection 83
P100 Setpoint source (setpoints for setpoint selection) 83
P101 Control signal source (setpoints for setpoint selection) 84
P102 Frequency scaling (setpoints for setpoint selection) 85
P11_ Analog input 1 86
P110 AI1 Scaling (setpoints for analog input) 87
P112 AI1 Operating mode (setpoints for analog input) 87
P113 Setpoint voltage offset (setpoints for analog input) 88
P12_ Setpoint generator 89
P121 Addition setpoint generator of the keypad (setpoints from setpoint generator of the keypad) 90
P122 FBG manual operation (setpoints from setpoint generator of the keypad) 90
P13_ Speed ramps 1 91
P130 Ramp t11 up (setpoints for speed ramps) 91
P131 Ramp t11 down (setpoints for speed ramps) 91
P136 Stop ramp t13 up = down (setpoints for speed ramps) 91, 92
P14_ Speed ramps 2 91
P140 Ramp t21 up (setpoints for speed ramps) 91
P141 Ramp t21 down (setpoints for speed ramps) 91
P146 Stop ramp t23 up = down (setpoints for speed ramps) 91, 92
P15_ Motor potentiometer function 92
P150 Ramp t3 motor potentiometer (setpoints for motor potentiometer) 92
P150 Save last setpoints (setpoints for motor potentiometer) 92
P16_ Fixed setpoints 1 92
P160 Internal setpoint n11 (setpoints for fixed setpoints) 92
P161 Internal setpoint n12 (setpoints for fixed setpoints) 92
P162 Internal setpoint n13 (setpoints for fixed setpoints) 92
P17_ Fixed setpoints 2 92
P170 Internal setpoint n21 (setpoints for fixed setpoints) 92
P171 Internal setpoint n22 (setpoints for fixed setpoints) 92
P172 Internal setpoint n23 (setpoints for fixed setpoints) 92
P2_ Controller parameters 92
P25_ PI controller 92
P250 PI Controller (controller parameter PI controller) 92
P251 P-gain (controller parameter PI controller) 92
P252 I-Component (controller parameter PI controller) 92
P253 PI actual value mode (controller parameter PI controller) 93
P254 PI actual value scaling (controller parameter PI controller) 93
P255 PI actual value offset (controller parameter PI controller) 93
P3__ Motor parameters 93
P30_ Limits 1 93
P300 Start/stop speed 1 (motor parameter limits) 93
P301 Minimum speed 1 (motor parameter limits) 93
P302 Maximum speed 1 (motor parameter limits) 93
P303 Current limit 1 (motor parameter limits) 93
P31_ Limits 2 93
P310 Start/stop speed 2 (motor parameter limits) 93
P311 Minimum speed 2 (motor parameter limits) 93
P312 Maximum speed 1 (motor parameter limits) 93
P313 Current limit 2 (motor parameter limits) 93
P32_ Motor adjustment 1 94
P320 Automatic adjustment 1 (motor parameter for motor adjustment) 94
P321 Boost 1 (motor parameter for motor adjustment) 94
P322 IxR Compensation 1 (motor parameter for motor adjustment) 94
P323 IxR Compensation 2 (motor parameter for motor adjustment) 94
P323 Pre-magnetization time 1 (motor parameter for motor adjustment) 94
P324 Slip compensation 1 (motor parameter for motor adjustment) 94
P325 No load damping (motor parameter for motor adjustment) 94
P33_ Motor adjustment 2 94
P330 Automatic adjustment 2 (motor parameter for motor adjustment) 94
P331 Boost 2 (motor parameter for motor adjustment) 94
P333 Pre-magnetization time 2 (motor parameter for motor adjustment) 94
P334 Slip compensation 2 (motor parameter for motor adjustment) 94
P345 Irated-UL monitoring 1 (motor parameter for motor adjustment) 94
P346 Irated-UL monitoring 2 (motor parameter for motor adjustment) 94
P4_ Reference messages 95
P40_ Speed reference message 95
P400 Speed reference value (reference messages: speed reference message) 95
P401 Hysteresis (reference messages: speed reference message) 95
P402 Delay time (reference messages: speed reference message) 95
P403 Message = "1" for (reference messages: speed reference message) 95
P45_ PI controller reference message 95

P450 PI Actual value reference (reference messages: PI controller reference message) 95
P451 Message = "1" for (reference messages: PI controller reference message) 95
P5__ Monitoring functions 95
P50 Speed monitoring 1 / 2 95
P500 Speed monitoring 1 (monitoring functions: speed monitoring) 95
P501 Delay time 1 (monitoring functions: speed monitoring) 95
P502 Speed monitoring 2 (monitoring functions: speed monitoring) 95
P6_ Terminal assignment 96
P60_ Binary inputs 96
P601 Binary input DI02 (terminal assignment of binary inputs) 96
P602 Binary input DI03 (terminal assignment of binary inputs) 96
P603 Binary input DI04 (terminal assignment of binary inputs) 96
P604 Binary input DI05 (terminal assignment of binary inputs) 96
P608 Binary input DI00 (terminal assignment of binary inputs) 96
P62_ Binary outputs 96
P620 Binary output DO01 (terminal assignment for binary outputs) 97
P621 Binary output DO02 (terminal assignment for binary outputs) 97
P622 Binary output DO03 (terminal assignment for binary outputs) 97
P7 Control functions 98
P70_ Operating mode 1 / 2 98
P700 Operating mode 1 (control functions operating mode) 99
P701 Operating mode 2 (control functions operating mode) 99
P71_ Standstill current function 1 / 2 100
P710 Standstill current function 1 (control functions standstill current function) 100
P711 Standstill current function 2 (control functions standstill current function) 100
P72_ Setpoint stop function 100
P720 Setpoint stop function 1 (control functions setpoint stop function) 100
P721 Stop setpoint 1 (control functions setpoint stop function) 100
P722 Start offset 1 (control functions setpoint stop function) 100
P723 Setpoint stop function 2 (control functions setpoint stop function) 100
P724 Stop setpoint 2 (control functions setpoint stop function) 100
P725 Start offset 2 (control functions setpoint stop function) 100
P73_ Brake function 1 / 2 100
P731 Brake release time 1 (control functions brake function) 101
P732 Brake application time 1 (control functions brake function) 101
P734 Brake release time 2 (control functions brake function) 101
P735 Brake application time 2 (control functions brake function) 101
P76 Manual operation 101
P760 Locking run/stop keys (control functions manual operation) 101
P8__ Unit functions 101
P80_ Setup 101
P800 Short menu (unit functions: setup) 101
P802 Factory setting (unit functions: setup) 102
P803 Parameter lock (unit functions: setup) 102
P804 Reset statistic data (unit functions: setup) 102
P81_ Serial communication 102
P810 RS-485 Address (unit functions: serial communication) 102
P811 RS-485 Group address (unit functions: serial communication) 102
P812 RS-485 Remote timeout (unit functions: serial communication) 102
P82_ Brake operation 1 / 2 102
P820 4-quadrant operation 1 (unit functions: brake operation) 102
P821 4-quadrant operation 2 (unit functions: brake operation) 102
P83_ Fault responses 102
P830 Response /EXT. FAULT (unit functions: fault responses) 102
P84_ Reset behavior 103
P840 Manual reset (unit functions: reset behavior) 103
P86_ Modulation 1 / 2 103
P860 PWM frequency 1 (unit functions: modulation) 103
P861 PWM frequency 2 (unit functions: modulation) 103
P862 PWM fix 1 (unit functions: modulation) 103
P863 PWM fix 2 (unit functions: modulation) 103
P87_ Fieldbus parameter settings 103
P870 Setpoint description PO1 (unit functions: fieldbus parameter settings) 103
P871 Setpoint description PO2 (unit functions: fieldbus parameter settings) 103
P872 PO Data enable (unit functions: fieldbus parameter settings) 103
P872 Setpoint description PO3 (unit functions: fieldbus parameter settings) 103
P873 Actual value description PI1 (unit functions: fieldbus parameter settings) 103
P874 Actual value description PI2 (unit functions: fieldbus parameter settings) 103
P875 Actual value description PI3 (unit functions: fieldbus parameter settings) 103
P88_ Serial communication SBus 104
P880 protocol SBus (unit functions: serial communication SBus) 104
P881 SBus address (unit functions: serial communication SBus) 104
P882 SBus group address (unit functions: serial communication SBus) 104
P883 SBus timeout interval (unit functions: serial communication SBus) 104
P884 SBus baud rate (unit functions: serial communication SBus) 104
P886 address CANopen (unit functions: serial communication SBus) 104
Parameter list 196
Parameter lock (unit functions: setup) 102
Parameter mode 212
Parameter set 82
Parameter-setting data 74
Parameters
Control functions 98
Control functions/manual operation 101
Control functions/operating modes 98
Controller parameters 92
Controller parameters/PI controller 92
Display values 81
Display values/analog setpoints 82
Display values/binary inputs 82
Display values/binary outputs 82
Display values/bus diagnostics 83
Display values/fault memory 82
Display values/process values 81
Display values/status displays 82
Display values/unit data 82
Monitoring functions 95
Monitoring functions/speed monitoring 95
Motor parameters 93
Motor parameters/motor adjustment 94
Motor parameters/limits 93
Reference messages 95
Reference messages/PI controller reference messages 95
Reference messages/speed reference message 95
Setpoints/ramp generators 83
Setpoints/ramp generators/analog input AI1 86

Setpoints/ramp generators/analog input AI2 89
Setpoints/ramp generators/fixed setpoints 1 92
Setpoints/ramp generators/motor potentiometers 92
Setpoints/ramp generators/setpoint potentiometers 89
Setpoints/ramp generators/setpoint preselection 83
Setpoints/ramp generators/speed ramps 91
Terminal assignment 96
Terminal assignment/binary inputs 96
Terminal assignment/binary outputs 96
Unit functions 101
Unit functions/brake operation 102
Unit functions/fault responses 102
Unit functions/fieldbus parameter settings 103
Unit functions/modulation 103
Unit functions/reset behavior 103
Unit functions/serial communication 102
Unit functions/setup 101
Part number 74, 75, 77
PC startup 189
Peak braking power 114
PI 1 Setpoint (display value for bus diagnostics) 83
PI 2 Setpoint (display value for bus diagnostics) 83
PI 3 Setpoint (display value for bus diagnostics) 83
PI Actual value mode (controller parameter PI controller) 93
PI Actual value offset (controller parameter PI controller) 93
PI Actual value reference 139
PI Actual value reference (reference messages: PI controller reference message) 95
PI Actual value scaling (controller parameter PI controller) 93
PI Controller 92, 137
Hysteresis 139
PI Actual value reference 139
PI Controller (controller parameter PI controller) 92
PI Controller reference message 95
PO 1 Setpoint (display value for bus diagnostics) 83
PO 2 Setpoint (display value for bus diagnostics) 83
PO 3 Setpoint (display value for bus diagnostics) 83
PO Data enable (unit functions: fieldbus parameter settings) 103
Pollution class 18
Power shield clamps, installation 157
Pre-magnetization time 94
Pre-magnetization time 1 (motor parameter for motor adjustment) 94
Pre-magnetization time 2 (motor parameter for motor adjustment) 94
Pressure control 137
Process input data words 103
Process output data words 103
Process values 81
PROFIBUS 72
Project planning 105
Protocol options 74, 77
PWM fix 1 (unit functions: modulation) 103
PWM fix 2 (unit functions: modulation) 103
PWM frequency 103, 111
PWM frequency 1 (unit functions: modulation) 103
PWM frequency 2 (unit functions: modulation) 103

R

Ramp t11 down (setpoints for speed ramps) 91
Ramp t11 up (setpoints for speed ramps) 91
Ramp t21 down (setpoints for speed ramps) 91
Ramp t21 up (setpoints for speed ramps) 91
Ramp t3 motor potentiometer (setpoints for motor potentiometer) 92
Rated output current (display value for unit data) 82
Recommended tools 149
Reference messages 95
Relay output 19
Reset 216
Reset behavior 103
Reset statistic data (unit functions: setup) 102
Response /EXT. ERROR (unit functions, error responses) 102
Return codes 206
RS-485 address 102
RS-485 Address (unit functions: serial communication) 102
RS-485 Group address (unit functions: serial communication) 102
RS-485 Remote timeout (unit functions: serial communication) 102
RS-485, installation 170

S

Safety notes 7
Save last setpoints (setpoints for motor potentiometer) 92
SBus address 104
SBus baud rate (unit functions: serial communication SBus) 104
SBus group address (unit functions: serial communication SBus) 104
SBus timeout interval (unit functions: serial communication SBus) 104
SCOPE 16
Serial communication 102
Service / repair 219
Set direction of rotation 180
Set speed 180
Setpoint control module, manual 179
Setpoint description PO1 (unit functions: fieldbus parameter settings) 103
Setpoint description PO2 (unit functions: fieldbus parameter settings) 103
Setpoint description PO3 (unit functions: fieldbus parameter settings) 103
Setpoint input 19
Setpoint potentiometer 84, 92
Setpoint selection 83
Setpoint selection, external 180
Setpoint source (setpoints for setpoint selection) 83
Setpoint specification, external 179
Setpoint stop function 1 (control functions setpoint stop function) 100
Setpoint stop function 2 (control functions setpoint stop function) 100
Setpoint technology 15
Setpoint voltage offset (setpoints for analog input) 88
Setpoints/ramp generators 83
Setup 101
Shielding 133
Shipping temperature 18
Short menu (unit functions: setup) 101
Slip compensation 94
Slip compensation 1 (motor parameter for motor adjustment) 94
Slip compensation 2 (motor parameter for motor adjustment) 94
Speed (display value for process value) 81
Speed monitoring 95
Speed monitoring 1 (monitoring functions: speed monitoring) 95
Speed monitoring 2 (monitoring functions: speed monitoring) 95
Speed ramps 91
Speed reference message 95
Speed reference value (reference messages: speed reference message) 95
Speed-torque characteristic curve 108
Standard applications 106
Standstill current function 1 (control functions standstill current function) 100
Standstill current function 2 (control functions standstill current function) 100
Start offset 1 (control functions setpoint stop function) 100
Start offset 2 (control functions setpoint stop function) 100
Start/stop speed 1 (motor parameter limits) 93
Start/Stop speed 2 (motor parameter limits) 93

Starting the motor 191
Analog setpoint specification 191
Fixed setpoints 193
Starting torque 107
Startup with DBG60B
Setting parameters 188
Startup with keypad 181
Startup with PC 189
Station address 74, 75, 77
Status displays 82, 207
Stop ramp t13 up = down (setpoints for speed ramps) 91, 92
Stop ramp t23 up = down (setpoints for speed ramps) 91, 92
Stop setpoint 1 (control functions setpoint stop function) 100
Stop setpoint 2 (control functions setpoint stop function) 100
Stop with inhibit 215
Stop/Fault 85, 102
Storage temperature 18
Submounting flat-design resistor 57
Supply system lead 119, 149
Support rail mounting flat design resistor 57
Switch-off responses 215
System bus (SBus), installation 168
System overview 11

T

Technical data
DFP21B option 74
Technical data BG0L AC 230 V 23, 26
Technical data BG0L AC 400 / 500 V 27, 28, 29, 30, 33, 34, 35, 36, 37, 38
Technical data BG0S AC 230 V 21, 22, 24, 25
Technical data BG0S AC 400 / 500 V 31, 32
Temperature control 137
Terminal assignment 96
Terminal response times 19
TF 19
Thermal class F 109
Thermistor 109
TN system 119
Tools, recommended 149
Trolleys 107
TT system 119

U

UL approval 17
UL compliant installation 155
Unit data 82
Unit design 144
Unit designation 148
Unit functions 101
Unit properties 13
Unit status codes 208
Unit type (display value for unit data) 82
USB11B 48
USB11B interface adapter 48
User menu 213
UWS11A 47
UWS11A interface adapter 47
UWS21A 48
UWS21A interface adapter 48

V

V/f 182
VFC 182
Voltage drop 124
Voltage drop on motor lead 120
Voltage supply system 119
Voltage-frequency characteristic curve 109

W

Wire resistor, braking resistor 52
Wiring diagram 163

Address Directory

Germany			
Headquarters Production Sales	**Bruchsal**	SEW-EURODRIVE GmbH & Co KG Ernst-Blickle-Straße 42 D-76646 Bruchsal P.O. Box Postfach 3023 • D-76642 Bruchsal	Tel. +49 7251 75-0 Fax +49 7251 75-1970 http://www.sew-eurodrive.de sew@sew-eurodrive.de
Production	**Graben**	SEW-EURODRIVE GmbH & Co KG Ernst-Blickle-Straße 1 D-76676 Graben-Neudorf P.O. Box Postfach 1220 • D-76671 Graben-Neudorf	Tel. +49 7251 75-0 Fax +49 7251 75-2970
	Östringen	SEW-EURODRIVE Östringen GmbH Franz-Gurk-Straße 2 D-76684 Östringen P.O. Box Postfach 1174 • D-76677 Östringen	Tel. +49 7253 92540 Fax +49 7253 925490 oestringen@sew-eurodrive.de
Service Competence Center	**Central**	SEW-EURODRIVE GmbH & Co KG Ernst-Blickle-Straße 1 D-76676 Graben-Neudorf	Tel. +49 7251 75-1710 Fax +49 7251 75-1711 sc-mitte@sew-eurodrive.de
	North	SEW-EURODRIVE GmbH & Co KG Alte Ricklinger Straße 40-42 D-30823 Garbsen (near Hannover)	Tel. +49 5137 8798-30 Fax +49 5137 8798-55 sc-nord@sew-eurodrive.de
	East	SEW-EURODRIVE GmbH & Co KG Dänkritzer Weg 1 D-08393 Meerane (near Zwickau)	Tel. +49 3764 7606-0 Fax +49 3764 7606-30 sc-ost@sew-eurodrive.de
	South	SEW-EURODRIVE GmbH & Co KG Domagkstraße 5 D-85551 Kirchheim (near München)	Tel. +49 89 909552-10 Fax +49 89 909552-50 sc-sued@sew-eurodrive.de
	West	SEW-EURODRIVE GmbH & Co KG Siemensstraße 1 D-40764 Langenfeld (near Düsseldorf)	Tel. +49 2173 8507-30 Fax +49 2173 8507-55 sc-west@sew-eurodrive.de
	Electronics	SEW-EURODRIVE GmbH & Co KG Ernst-Blickle-Straße 42 D-76646 Bruchsal	Tel. +49 7251 75-1780 Fax +49 7251 75-1769 sc-elektronik@sew-eurodrive.de
	Drive Service Hotline / 24 Hour Service		+49 180 5 SEWHELP +49 180 5 7394357
Technical Offices	**Augsburg**	SEW-EURODRIVE GmbH & Co KG August-Wessels-Straße 29 D-86156 Augsburg	Tel. +49 821 22779-10 Fax +49 821 22779-50 tb-augsburg@sew-eurodrive.de
	Berlin	SEW-EURODRIVE GmbH & Co KG Lilienthalstraße 3a D-12529 Schönefeld	Tel. +49 33762 2266-30 Fax +49 33762 2266-36 tb-berlin@sew-eurodrive.de
	Bodensee	SEW-EURODRIVE GmbH & Co KG Burgbergring 91 D-88662 Überlingen	Tel. +49 7551 9226-30 Fax +49 7551 9226-56 tb-bodensee@sew-eurodrive.de
	Bremen	SEW-EURODRIVE GmbH & Co KG Bornstr.19 ... 22 D-28195 Bremen	Tel. +49 421 33918-10 Fax +49 421 33918-22 tb-bremen@sew-eurodrive.de
	Dortmund	SEW-EURODRIVE GmbH & Co KG Hildastraße 10 D-44145 Dortmund	Tel. +49 231 912050-10 Fax +49 231 912050-20 tb-dortmund@sew-eurodrive.de
	Dresden	SEW-EURODRIVE GmbH & Co KG Hauptstraße 32 D-01445 Radebeul	Tel. +49 351 26338-0 Fax +49 351 26338-38 tb-dresden@sew-eurodrive.de
	Erfurt	SEW-EURODRIVE GmbH & Co KG Blumenstraße 70 D-99092 Erfurt	Tel. +49 361 21709-70 Fax +49 361 21709-79 tb-erfurt@sew-eurodrive.de
	Güstrow	SEW-EURODRIVE GmbH & Co KG Thünenweg 19 D-18273 Güstrow P.O. Box Postfach 1216 • D-18262 Güstrow	Tel. +49 3843 8557-80 Fax +49 3843 8557-88 tb-guestrow@sew-eurodrive.de

Germany			
	Hamburg	SEW-EURODRIVE GmbH & Co KG Bramfelder Straße 119 D-22305 Hamburg	Tel. +49 40 298109-60 Fax +49 40 298109-70 tb-hamburg@sew-eurodrive.de
	Hannover/ Garbsen	SEW-EURODRIVE GmbH & Co KG Alte Ricklinger Str.40-42 D-30823 Garbsen P.O. Box Postfach 1104 53 • D-30804 Garbsen	Tel. +49 5137 8798-10 Fax +49 5137 8798-50 tb-hannover@sew-eurodrive.de
	Heilbronn	SEW-EURODRIVE GmbH & Co KG Zeppelinstraße 7 D-74357 Bönnigheim P.O. Box Postfach 68 • D-74355 Bönnigheim	Tel. +49 7143 8738-0 Fax +49 7143 8738-25 tb-heilbronn@sew-eurodrive.de
	Herford	SEW-EURODRIVE GmbH & Co KG Radewiger Straße 21 D-32052 Herford P.O. Box Postfach 4108 • D-32025 Herford	Tel. +49 5221 9141-0 Fax +49 5221 9141-20 tb-herford@sew-eurodrive.de
	Karlsruhe	SEW-EURODRIVE GmbH & Co KG Ettlinger Weg 2 D-76467 Bietigheim P.O. Box Postfach 43 • D-76463 Bietigheim	Tel. +49 7245 9190-10 Fax +49 7245 9190-20 tb-karlsruhe@sew-eurodrive.de
	Kassel	SEW-EURODRIVE GmbH & Co KG Lange Straße 14 D-34253 Lohfelden	Tel. +49 561 95144-80 Fax +49 561 95144-90 tb-kassel@sew-eurodrive.de
	Koblenz	SEW-EURODRIVE GmbH & Co KG Bahnstraße 17a D-56743 Mendig	Tel. +49 2652 9713-30 Fax +49 2652 9713-40 tb-koblenz@sew-eurodrive.de
	Lahr	SEW-EURODRIVE GmbH & Co KG Europastraße 3/1 D-77933 Lahr / Schwarzwald	Tel. +49 7821 90999-60 Fax +49 7821 90999-79 tb-lahr@sew-eurodrive.de
	Langenfeld	SEW-EURODRIVE GmbH & Co KG Siemensstraße 1 D-40764 Langenfeld	Tel. +49 2173 8507-10 Fax +49 2173 8507-50 tb-langenfeld@sew-eurodrive.de
	Magdeburg	SEW-EURODRIVE GmbH & Co KG Breiteweg 53 D-39789 Barleben	Tel. +49 39203 7577-1 Fax +49 39203 7577-9 tb-magdeburg@sew-eurodrive.de
	Mannheim	SEW-EURODRIVE GmbH & Co KG Radeberger Straße 2 D-68309 Mannheim	Tel. +49 621 71683-10 Fax +49 621 71683-22 tb-mannheim@sew-eurodrive.de
	München	SEW-EURODRIVE GmbH & Co KG Domagkstraße 5 D-85551 Kirchheim	Tel. +49 89 90955-110 Fax +49 89 90955-150 tb-muenchen@sew-eurodrive.de
	Münster	SEW-EURODRIVE GmbH & Co KG Von-Vincke-Straße 14 D-48143 Münster	Tel. +49 251 41475-11 Fax +49 251 41475-50 tb-muenster@sew-eurodrive.de
	Nürnberg	SEW-EURODRIVE GmbH & Co KG Plattenäckerweg 6 D-90455 Nürnberg	Tel. +49 911 98884-50 Fax +49 911 98884-60 tb-nuernberg@sew-eurodrive.de
	Regensburg	SEW-EURODRIVE GmbH & Co KG Im Gewerbepark A15 D-93059 Regensburg	Tel. +49 941 46668-68 Fax +49 941 46668-66 tb-regensburg@sew-eurodrive.de
	Rhein-Main	SEW-EURODRIVE GmbH & Co KG Niederstedter Weg 5 D-61348 Bad Homburg	Tel. +49 6172 9617-0 Fax +49 6172 9617-50 tb-rheinmain@sew-eurodrive.de
	Stuttgart	SEW-EURODRIVE GmbH & Co KG Friedrich-List-Straße 46 D-70771 Leinfelden-Echterdingen	Tel. +49 711 16072-0 Fax +49 711 16072-72 tb-stuttgart@sew-eurodrive.de
	Ulm	SEW-EURODRIVE GmbH & Co KG Dieselstraße 14 D-89160 Dornstadt	Tel. +49 7348 9885-0 Fax +49 7348 9885-90 tb-ulm@sew-eurodrive.de

Germany			
	Würzburg	SEW-EURODRIVE GmbH & Co KG Nürnbergerstraße 118 D-97076 Würzburg-Lengfeld	Tel. +49 931 27886-60 Fax +49 931 27886-66 tb-wuerzburg@sew-eurodrive.de
	Zwickau / Meerane	SEW-EURODRIVE GmbH & Co KG Dänkritzer Weg1 D-08393 Meerane	Tel. +49 3764 7606-0 Fax +49 3764 7606-20 tb-zwickau@sew-eurodrive.de

France			
Production **Sales** **Service**	**Haguenau**	SEW-USOCOME 48-54, route de Soufflenheim B. P. 20185 F-67506 Haguenau Cedex	Tel. +33 3 88 73 67 00 Fax +33 3 88 73 66 00 http://www.usocome.com sew@usocome.com
Production	**Forbach**	SEW-EUROCOME Zone Industrielle Technopôle Forbach Sud B. P. 30269 F-57604 Forbach Cedex	Tel. +33 3 87 29 38 00
Assembly **Sales** **Service**	**Bordeaux**	SEW-USOCOME Parc d'activités de Magellan 62, avenue de Magellan - B. P. 182 F-33607 Pessac Cedex	Tel. +33 5 57 26 39 00 Fax +33 5 57 26 39 09
	Lyon	SEW-USOCOME Parc d'Affaires Roosevelt Rue Jacques Tati F-69120 Vaulx en Velin	Tel. +33 4 72 15 37 00 Fax +33 4 72 15 37 15
	Paris	SEW-USOCOME Zone industrielle 2, rue Denis Papin F-77390 Verneuil l'Etang	Tel. +33 1 64 42 40 80 Fax +33 1 64 42 40 88
Technical Offices	**Alsace Franche-Comté**	SEW-USOCOME 1, rue Auguste Gasser F-68360 Soultz	Tel. +33 3 89 74 51 62 Fax +33 3 89 76 58 71
	Alsace Nord	SEW-USOCOME 15, rue Mambourg F-68240 Sigolsheim	Tel. +33 3 89 78 45 11 Fax +33 3 89 78 45 12
	Aquitaine	SEW-USOCOME Parc d'activités de Magellan 62, avenue de Magellan B.P.182 F-33607 Pessac Cedex	Tel. +33 5 57 26 39 00 Fax +33 5 57 26 39 09
	Ardennes **Lorraine**	SEW-USOCOME 7, rue de Prény F-54000 Nancy	Tel. +33 3 83 96 28 04 Fax +33 3 83 96 28 07
	Bourgogne	SEW-USOCOME 10, rue de la Poste F-71350 Saint Loup Géanges	Tel. +33 3 85 49 92 18 Fax +33 3 85 49 92 19
	Bretagne Ouest	SEW-USOCOME 4, rue des Châtaigniers F-44830 Brains	Tel. +33 2 51 70 54 04 Fax +33 2 51 70 54 05
	Centre **Auvergne**	SEW-USOCOME 27, avenue du Colombier F-19150 Laguenne	Tel. +33 5 55 20 12 10 Fax +33 5 55 20 12 11
	Centre **Pays de Loire**	SEW-USOCOME 9, rue des Erables F-37540 Saint Cyr sur Loire	Tel. +33 2 47 41 33 23 Fax +33 2 47 41 34 03
	Champagne	SEW-USOCOME 23 rue Victor Hugo F-10120 Saint André les Vergers	Tel. +33 3 25 79 63 24 Fax +33 3 25 79 63 25
	Lyon Nord-Est	SEW-USOCOME Parc d'Affaires Roosevelt Rue Jacques Tati F-69120 Vaulx en Velin	Tel. +33 4 72 15 37 03 Fax +33 4 72 15 37 15

France			
	Lyon Ouest	SEW-USOCOME Parc d'Affaires Roosevelt Rue Jacques Tati F-69120 Vaulx en Velin	Tel. +33 4 72 15 37 04 Fax +33 4 72 15 37 15
	Lyon Sud-Est	SEW-USOCOME Montée de la Garenne F-26750 Génissieux	Tel. +33 4 75 05 65 95 Fax +33 4 75 05 65 96
	Nord	SEW-USOCOME 348, rue du Calvaire F-59213 Bermerain Cidex 102	Tel. +33 3 27 27 07 88 Fax +33 3 27 27 24 41
	Normandie	SEW-USOCOME 5 rue de la Limare F-14250 Brouay	Tel. +33 2 31 37 92 86 Fax +33 2 31 74 68 15
	Paris Est	SEW-USOCOME Résidence Le Bois de Grâce 2, allée des Souches Vertes F-77420 Champs sur Marne	Tel. +33 1 64 68 40 50 Fax +33 1 64 68 45 00
	Paris Ouest	SEW-USOCOME 42 avenue Jean Jaurès F-78580 Maule	Tel. +33 1 30 90 89 86 Fax +33 1 30 90 93 15
	Paris Picardie	SEW-USOCOME 25 bis, rue Kléber F-92300 Levallois Perret	Tel. +33 1 41 05 92 74 Fax +33 1 41 05 92 75
	Paris Sud	SEW-USOCOME 6. chemin des Bergers Lieu-dit Marchais F-91410 Roinville sous Dourdan	Tel. +33 1 60 81 10 56 Fax +33 1 60 81 10 57
	Provence	SEW-USOCOME Résidence Les Hespérides Bât. B2 67, boulevard des Alpes F-13012 Marseille	Tel. +33 4 91 18 00 11 Fax +33 4 91 18 00 12
	Pyrénées	SEW-USOCOME 271, Lieu-dit Ninaut F-31190 Caujac	Tel. +33 5 61 08 15 85 Fax +33 5 61 08 16 44
	Sud-Atlantique	SEW-USOCOME 12, rue des Pinsons F-44120 Vertou	Tel. +33 2 40 80 32 23 Fax +33 2 40 80 32 13

Algeria			
Sales	**Alger**	Réducom 16, rue des Frères Zaghnoun Bellevue El-Harrach 16200 Alger	Tel. +213 21 8222-84 Fax +213 21 8222-84

Argentina			
Assembly **Sales** **Service**	**Buenos Aires**	SEW EURODRIVE ARGENTINA S.A. Centro Industrial Garin, Lote 35 Ruta Panamericana Km 37,5 1619 Garin	Tel. +54 3327 4572-84 Fax +54 3327 4572-21 sewar@sew-eurodrive.com.ar

Australia			
Assembly **Sales** **Service**	**Melbourne**	SEW-EURODRIVE PTY. LTD. 27 Beverage Drive Tullamarine, Victoria 3043	Tel. +61 3 9933-1000 Fax +61 3 9933-1003 http://www.sew-eurodrive.com.au enquires@sew-eurodrive.com.au
	Sydney	SEW-EURODRIVE PTY. LTD. 9, Sleigh Place, Wetherill Park New South Wales, 2164	Tel. +61 2 9725-9900 Fax +61 2 9725-9905 enquires@sew-eurodrive.com.au
	Perth	SEW-EURODRIVE PTY. LTD. 105 Robinson Avenue Belmont, W.A. 6104	Tel. +61 8 9478-2688 Fax +61 8 9277-7572 enquires@sew-eurodrive.com.au
	Brisbane	SEW-EURODRIVE PTY.LTD. 1 /34 Collinsvale St Rocklea, Queensland, 4106	Tel. +61 7 3272-7900 Fax +61 7 3272-7901 enquires@sew-eurodrive.com.au

Australia			
Technical Offices	**Adelaide**	SEW-EURODRIVE PTY. LTD. Unit 1/601 Anzac Highway Glenelg, S.A. 5045	Tel. +61 8 8294-8277 Fax +61 8 8294-2893 enquires@sew-eurodrive.com.au
	Townsville	SEW-EURODRIVE PTY. LTD. 12 Leyland Street Garbutt, QLD 4814	Tel. +61 7 4779 4333 Fax +61 7 4779 5333 enquires@sew-eurodrive.com.au

Austria			
Assembly **Sales** **Service**	**Wien**	SEW-EURODRIVE Ges.m.b.H. Richard-Strauss-Strasse 24 A-1230 Wien	Tel. +43 1 617 55 00-0 Fax +43 1 617 55 00-30 http://sew-eurodrive.at sew@sew-eurodrive.at
Technical Offices	**Linz**	SEW-EURODRIVE Ges.m.b.H. Reuchlinstr. 6/3 A-4020 Linz	Tel. +43 732 655 109-0 Fax +43 732 655 109-20 tb-linz@sew-eurodrive.at
	Graz	SEW-EURODRIVE Ges.m.b.H. Grabenstraße 231 A-8045 Graz	Tel. +43 316 685 756-0 Fax +43 316 685 755 tb-graz@sew-eurodrive.at
	Dornbirn	SEW-EURODRIVE Ges.m.b.H. Lustenauerstraße 27/1 A-6850 Dornbirn	Tel. +43 5572 3725 99-0 Fax +43 5572 3725 99-20 tb-dornbirn@sew-eurodrive.at

Bangladesh			
Sales	**Dhaka**	Triangle Trade International Bldg-5, Road-2, Sec-3, Uttara Model Town Dhaka-1230 Bangladesh	Tel. +880 2 8912246 Fax +880 2 8913344

Belgium			
Assembly **Sales** **Service**	**Brüssel**	SEW Caron-Vector S.A. Avenue Eiffel 5 B-1300 Wavre	Tel. +32 10 231-311 Fax +32 10 231-336 http://www.sew-eurodrive.be info@caron-vector.be
Technical Office	**Vlaanderen**	SEW Caron-Vector S.A. Verlorenbroodstraat, 122, bus 6 B-9820 Merelbeke	Tel. +32 92 1686 25 Fax +32 92 2741 55

Brazil			
Production **Sales** **Service**	**Sao Paulo**	SEW-EURODRIVE Brasil Ltda. Avenida Amâncio Gaiolli, 50 Caixa Postal: 201-07111-970 Guarulhos/SP - Cep.: 07251-250	Tel. +55 11 6489-9133 Fax +55 11 6480-3328 http://www.sew.com.br sew@sew.com.br
	Additional addresses for service in Brazil provided on request!		

Bulgaria			
Sales	**Sofia**	BEVER-DRIVE GmbH Bogdanovetz Str.1 BG-1606 Sofia	Tel. +359 2 9151160 Fax +359 2 9151166 bever@fastbg.net

Cameroon			
Sales	**Douala**	Electro-Services Rue Drouot Akwa B.P. 2024 Douala	Tel. +237 4322-99 Fax +237 4277-03

Canada			
Assembly **Sales** **Service**	**Toronto**	SEW-EURODRIVE CO. OF CANADA LTD. 210 Walker Drive Bramalea, Ontario L6T3W1	Tel. +1 905 791-1553 Fax +1 905 791-2999 http://www.sew-eurodrive.ca marketing@sew-eurodrive.ca
	Vancouver	SEW-EURODRIVE CO. OF CANADA LTD. 7188 Honeyman Street Delta. B.C. V4G 1 E2	Tel. +1 604 946-5535 Fax +1 604 946-2513 b.wake@sew-eurodrive.ca

Canada			
	Montreal	SEW-EURODRIVE CO. OF CANADA LTD. 2555 Rue Leger LaSalle, Quebec H8N 2V9	Tel. +1 514 367-1124 Fax +1 514 367-3677 a.peluso@sew-eurodrive.ca
	Additional addresses for service in Canada provided on request!		

Chile			
Assembly **Sales** **Service**	**Santiago de Chile**	SEW-EURODRIVE CHILE LTDA. Las Encinas 1295 Parque Industrial Valle Grande LAMPA RCH-Santiago de Chile P.O. Box Casilla 23 Correo Quilicura - Santiago - Chile	Tel. +56 2 75770-00 Fax +56 2 75770-01 http://www.sew-eurodrive.cl ventas@sew-eurodrive.cl

China			
Production **Assembly** **Sales** **Service**	**Tianjin**	SEW-EURODRIVE (Tianjin) Co., Ltd. No. 46, 7th Avenue, TEDA Tianjin 300457	Tel. +86 22 25322612 Fax +86 22 25322611 gm-tianjin@sew-eurodrive.cn http://www.sew-eurodrive.com.cn
Assembly **Sales** **Service**	**Suzhou**	SEW-EURODRIVE (Suzhou) Co., Ltd. 333, Suhong Middle Road Suzhou Industrial Park Jiangsu Province, 215021 P. R. China	Tel. +86 512 62581781 Fax +86 512 62581783 suzhou@sew.com.cn
	Guangzhou	SEW-EURODRIVE (Guangzhou) Co., Ltd. No. 9, JunDa Road East Section of GETDD Guangzhou 510530 P. R. China	Tel. +86 20 82267890 Fax +86 20 82267891 sewguangzhou@sew.com.cn
	Shenyang	SEW-EURODRIVE (Shenyang) Co., Ltd. 10A-2, 6th Road Shenyang Economic Technological ¬Development Area Shenyang, 110141 P. R. China	Tel. +86 24 22521596 Fax +86 24 22521579 shenyang@sew.com.cn

Colombia			
Assembly **Sales** **Service**	**Bogotá**	SEW-EURODRIVE COLOMBIA LTDA. Calle 22 No. 132-60 Bodega 6, Manzana B Santafé de Bogotá	Tel. +57 1 54750-50 Fax +57 1 54750-44 http://www.sew-eurodrive.com.co sewcol@sew-eurodrive.com.co

Croatia			
Sales **Service**	**Zagreb**	KOMPEKS d. o. o. PIT Erdödy 4 II HR 10 000 Zagreb	Tel. +385 1 4613-158 Fax +385 1 4613-158 kompeks@net.hr

Czech Republic			
Sales	**Praha**	SEW-EURODRIVE CZ S.R.O. Business Centrum Praha Lužná 591 CZ-16000 Praha 6 - Vokovice	Tel. +420 220121234 Fax +420 220121237 http://www.sew-eurodrive.cz sew@sew-eurodrive.cz
Technical Offices	**Brno**	SEW-EURODRIVE CZ S.R.O. Křenová 52 CZ -60200 Brno	Tel. +420 543256151 + 543256163 Fax +420 543256845
	Hradec Králové	SEW-EURODRIVE CZ S.R.O. Èechova 498 CZ-50202 Hradec Králové	Tel. +420 495510141 Fax +420 495521313
	Plzeň	SEW-EURODRIVE CZ S.R.O. Areal KRPA a.s. Zahradni 173/2 CZ-32600 Plzeň	Tel. +420 378775300 Fax +420 377970710

Czech Republic			
	Klatovy	SEW-EURODRIVE CZ S.R.O. Technická kancelář Klatovy Domažlická 800 CZ-33901 Klatovy	Tel. +420 376310729 Fax +420 376310725

Denmark			
Assembly **Sales** **Service**	**Kopenhagen**	SEW-EURODRIVEA/S Geminivej 28-30 DK-2670 Greve	Tel. +45 43 9585-00 Fax +45 43 9585-09 http://www.sew-eurodrive.dk sew@sew-eurodrive.dk

Egypt			
Sales **Service**	**Cairo**	Copam Egypt for Engineering & Agencies 33 El Hegaz ST, Heliopolis, Cairo	Tel. +20 2 22566-299 + 1 23143088 Fax +20 2 22594-757 http://www.copam-egypt.com/ copam@datum.com.eg

Estonia			
Sales	**Tallin**	ALAS-KUUL AS Reti tee 4 EE-75301 Peetri küla, Rae vald, Harjumaa	Tel. +372 6593230 Fax +372 6593231 veiko.soots@alas-kuul.ee

Finland			
Assembly **Sales** **Service**	**Lahti**	SEW-EURODRIVE OY Vesimäentie 4 FIN-15860 Hollola 2	Tel. +358 201 589-300 Fax +358 3 780-6211 sew@sew.fi http://www.sew-eurodrive.fi
Technical Offices	**Helsinki**	SEW-EURODRIVE OY Luutnantinaukio 5C LT2 FIN-00410 Helsinki	Tel. +358 201 589-300 Fax + 358 9 5666-311 sew@sew.fi
	Vaasa	SEW-EURODRIVE OY Kauppapuistikko 11 E FIN-65100 Vaasa	Tel. +358 3 589-300 Fax +358 6 3127-470

Gabon			
Sales	**Libreville**	Electro-Services B.P. 1889 Libreville	Tel. +241 7340-11 Fax +241 7340-12

Great Britain			
Assembly **Sales** **Service**	**Normanton**	SEW-EURODRIVE Ltd. Beckbridge Industrial Estate P.O. Box No.1 GB-Normanton, West- Yorkshire WF6 1QR	Tel. +44 1924 893-855 Fax +44 1924 893-702 http://www.sew-eurodrive.co.uk info@sew-eurodrive.co.uk
Technical Offices	**London**	SEW-EURODRIVE Ltd. 764 Finchely Road, Temple Fortune GB-London N.W.11 7TH	Tel. +44 20 8458-8949 Fax +44 20 8458-7417
	Midlands	SEW-EURODRIVE Ltd. 5 Sugar Brook court, Aston Road, Bromsgrove, Worcs B60 3EX	Tel. +44 1527 877-319 Fax +44 1527 575-245
	Scotland	SEW-EURODRIVE Ltd. Scottish Office No 37 Enterprise House Springkerse Business Park GB-Stirling FK7 7UF Scotland	Tel. +44 17 8647-8730 Fax +44 17 8645-0223

Greece			
Sales **Service**	**Athen**	Christ. Boznos & Son S.A. 12, Mavromichali Street P.O. Box 80136, GR-18545 Piraeus	Tel. +30 2 1042 251-34 Fax +30 2 1042 251-59 http://www.boznos.gr info@boznos.gr
Technical Office	**Thessaloniki**	Christ. Boznos & Son S.A. Maiandrou 15 562 24 Evosmos, Thessaloniki	Tel. +30 2 310 7054-00 Fax +30 2 310 7055-15 info@boznos.gr

Hong Kong			
Assembly **Sales** **Service**	**Hong Kong**	SEW-EURODRIVE LTD. Unit No. 801-806, 8th Floor Hong Leong Industrial Complex No. 4, Wang Kwong Road Kowloon, Hong Kong	Tel. +852 2 7960477 + 79604654 Fax +852 2 7959129 contact@sew-eurodrive.hk

Hungary			
Sales **Service**	**Budapest**	SEW-EURODRIVE Kft. H-1037 Budapest Kunigunda u. 18	Tel. +36 1 437 06-58 Fax +36 1 437 06-50 office@sew-eurodrive.hu

Iceland			
Sales	**Reykjavik**	Vélaverk ehf. Bolholti 8, 3h. IS - 105 Reykjavik	Tel. +354 568 3536 Fax +354 568 3537 velaverk@velaverk.is

India			
Assembly **Sales** **Service**	**Baroda**	SEW-EURODRIVE India Pvt. Ltd. Plot No. 4, Gidc Por Ramangamdi • Baroda - 391 243 Gujarat	Tel. +91 265 2831086 Fax +91 265 2831087 http://www.seweurodriveindia.com mdoffice@seweurodriveindia.com
Technical Offices	**Bangalore**	SEW-EURODRIVE India Private Limited 308, Prestige Centre Point 7, Edward Road Bangalore	Tel. +91 80 22266565 Fax +91 80 22266569 salesbang@seweurodriveindia.com
	Calcutta	SEW EURODRIVE INDIA PVT. LTD. Juthika Apartment, Flat No. B1 11/1, Sunny Park Calcutta - 700 019	Tel. +91 33 24615820 Fax +91 33 24615826 sewcal@cal.vsnl.net.in
	Chennai	SEW-EURODRIVE India Private Limited F2, 1st Floor, Sarvamangala Indira New No. 67, Bazullah Road Chennai - 600 017	Tel. +91 44 28144461 Fax +91 44 28144463 saleschen@seweurodriveindia.com
	Hyderabad	SEW-EURODRIVE India Pvt. Limited 408, 4th Floor, Meridian Place Green Park Road Amerpeet Hyderabad	Tel. +91 40 23414698 Fax +91 40 23413884 saleshyd@seweurodriveindia.com
	Mumbai	SEW-EURODRIVE India Private Limited 312 A, 3rd Floor, Acme Plaza Andheri Kurla Road, Andheri (E) Mumbai	Tel. +91 22 28348440 Fax +91 22 28217858 salesmumbai@seweurodriveindia.com
	New Delhi	SEW-EURODRIVE India Private Limited 303 Kirti Deep, 2-Nangal Raya Business Centre New Delhi 110 046	Tel. +91 11 28521566 Fax +91 11 28521577 salesdelhi@seweurodriveindia.com
	Pune	SEW-EURODRIVE India Private Limited 206, Metro House 7 Mangaldas Road Pune 411001, Maharashtra	Tel. +91 20 26111054 Fax +91 20 26132337 salespune@seweurodriveindia.com

Indonesia			
Technical Office	**Jakarta**	SEW-EURODRIVE Pte Ltd. Jakarta Liaison Office, Menara Graha Kencana Jl. Perjuangan No. 88, LT 3 B, Kebun Jeruk, Jakarta 11530	Tel. +62 21 5359066 Fax +62 21 5363686

Ireland			
Sales **Service**	**Dublin**	Alperton Engineering Ltd. 48 Moyle Road Dublin Industrial Estate Glasnevin, Dublin 11	Tel. +353 1 830-6277 Fax +353 1 830-6458 info@alperton.ie

Israel			
Sales	**Tel-Aviv**	Liraz Handasa Ltd. Ahofer Str 34B / 228 58858 Holon	Tel. +972 3 5599511 Fax +972 3 5599512 office@liraz-handasa.co.il

Italy			
Assembly **Sales** **Service**	**Milano**	SEW-EURODRIVE di R. Blickle & Co.s.a.s. Via Bernini,14 I-20020 Solaro (Milano)	Tel. +39 02 96 9801 Fax +39 02 96 799781 http://www.sew-eurodrive.it sewit@sew-eurodrive.it
Technical Offices	**Bologna**	SEW-EURODRIVE di R. Blickle & Co.s.a.s. Via della Grafica, 47 I-40064 Ozzano dell'Emilia (Bo)	Tel. +39 051 65-23-801 Fax +39 051 796-595
	Caserta	SEW-EURODRIVE di R. Blickle & Co.s.a.s. Viale Carlo III Km. 23,300 I-81020 S. Nicola la Strada (Caserta)	Tel. +39 0823 219011 Fax +39 0823 421414
	Firenze	RIMA Via Einstein, 14 I-50013 Campi Bisenzio (Firenze)	Tel. +39 055 898 58-21 Fax +39 055 898 58-30
	Pescara	SEW-EURODRIVE di R. Blickle & Co.s.a.s. Viale Europa,132 I-65010 Villa Raspa di Spoltore (PE)	Tel. +39 085 41-59-427 Fax +39 085 41-59-643
	Torino	SEW-EURODRIVE di R. Blickle & Co.s.a.s. Filiale Torino c.so Unione Sovietica 612/15 - int. C I-11035 Torino	Tel. +39 011 3473780 Fax +39 011 3473783
	Verona	SEW-EURODRIVE di R. Blickle & Co.s.a.s. Via P. Sgulmero, 27/A I-37132 Verona	Tel. +39 045 89-239-11 Fax +39 045 97-6079

Ivory Coast			
Sales	**Abidjan**	SICA Ste industrielle et commerciale pour l'Afrique 165, Bld de Marseille B.P. 2323, Abidjan 08	Tel. +225 2579-44 Fax +225 2584-36

Japan			
Assembly **Sales** **Service**	**Iwata**	SEW-EURODRIVE JAPAN CO., LTD 250-1, Shimoman-no, Iwata Shizuoka 438-0818	Tel. +81 538 373811 Fax +81 538 373814 http://www.sew-eurodrive.co.jp sewjapan@sew-eurodrive.co.jp
Technical Offices	**Fukuoka**	SEW-EURODRIVE JAPAN CO., LTD. C-go, 5th-floor, Yakuin-Hiruzu-Bldg. 1-5-11, Yakuin, Chuo-ku Fukuoka, 810-0022	Tel. +81 92 713-6955 Fax +81 92 713-6860 sewkyushu@jasmine.ocn.ne.jp
	Osaka	SEW-EURODRIVE JAPAN CO., LTD. B-Space EIRAI Bldg., 3rd Floor 1-6-9 Kyoumachibori, Nishi-ku, Osaka, 550-0003	Tel. +81 6 6444--8330 Fax +81 6 6444--8338 sewosaka@crocus.ocn.ne.jp
	Tokyo	SEW-EURODRIVE JAPAN CO., LTD. Izumi-Bldg. 5 F 3-2-15 Misaki-cho Chiyoda-ku, Tokyo 101-0061	Tel. +81 3 3239-0469 Fax +81 3 3239-0943 sewtokyo@basil.ocn.ne.jp

Korea			
Assembly **Sales** **Service**	**Ansan-City**	SEW-EURODRIVE KOREA CO., LTD. B 601-4, Banweol Industrial Estate Unit 1048-4, Shingil-Dong Ansan 425-120	Tel. +82 31 492-8051 Fax +82 31 492-8056 http://www.sew-korea.co.kr master@sew-korea.co.kr
	Busan	SEW-EURODRIVE KOREA Co., Ltd. No. 1720 - 11, Songjeong - dong Gangseo-ku Busan 618-270	Tel. +82 51 832-0204 Fax +82 51 832-0230 master@sew-korea.co.kr
Technical Offices	**Daegu**	SEW-EURODRIVE KOREA Co., Ltd. No.1108 Sungan officete I 87-36, Duryu 2-dong, Dalseo-ku Daegu 704-712	Tel. +82 53 650-7111 Fax +82 53 650-7112 sewdaegu@netsgo.com
	DaeJeon	SEW-EURODRIVE KOREA Co., Ltd. No. 2017, Hongin offictel 536-9, Bongmyung-dong, Yusung-ku Daejeon 305-301	Tel. +82 42 828-6461 Fax +82 42 828-6463 sewdaejeon@netsgo.com
	Kwangju	SEW-EURODRIVE KOREA Co., Ltd. 4fl., Shinhyun B/D 96-16 Unam-dong, Buk-ku Kwangju 500-170	Tel. +82 62 511-9172 Fax +82 62 511-9174 sewkwangju@netsgo.com
	Seoul	SEW-EURODRIVE KOREA Co., Ltd. No.1104 Sunkyung officetel 106-4 Kuro 6-dong, Kuro-ku Seoul 152-054	Tel. +82 2 862-8051 Fax +82 2 862-8199 sewseoul@netsgo.com

Latvia			
Sales	**Riga**	SIA Alas-Kuul Katlakalna 11C LV-1073 Riga	Tel. +371 7139253 Fax +371 7139386 http://www.alas-kuul.com info@alas-kuul.com

Lebanon			
Sales	**Beirut**	Gabriel Acar & Fils sarl B. P. 80484 Bourj Hammoud, Beirut	Tel. +961 1 4947-86 +961 1 4982-72 +961 3 2745-39 Fax +961 1 4949-71 gacar@beirut.com

Lithuania			
Sales	**Alytus**	UAB Irseva Naujoji 19 LT-62175 Alytus	Tel. +370 315 79204 Fax +370 315 56175 info@irseva.lt http://www.sew-eurodrive.lt

Luxembourg			
Assembly **Sales** **Service**	**Brüssel**	CARON-VECTOR S.A. Avenue Eiffel 5 B-1300 Wavre	Tel. +32 10 231-311 Fax +32 10 231-336 http://www.sew-eurodrive.lu info@caron-vector.be

Malaysia			
Assembly **Sales** **Service**	**Johore**	SEW-EURODRIVE SDN BHD No. 95, Jalan Seroja 39, Taman Johor Jaya 81000 Johor Bahru, Johor West Malaysia	Tel. +60 7 3549409 Fax +60 7 3541404 sales@sew-eurodrive.com.my
Technical Offices	**Kota Kinabalu**	SEW-EURODRIVE Sdn Bhd (Kota Kinabalu Branch) Lot No. 2,1st Floor, Inanam Baru Phase III, Miles 5.1 /2, Jalan Tuaran, Inanam 89350 Kota Kinabalu Sabah, Malaysia	Tel. +60 88 424792 Fax +60 88 424807
	Kuala Lumpur	SEW-EURODRIVE Sdn. Bhd. No. 2, Jalan Anggerik Mokara 31/46 Kota Kemuning Seksyen 31 40460 Shah Alam Selangor Darul Ehsan	Tel. +60 3 5229633 Fax +60 3 5229622 sewpjy@po.jaring.my

Malaysia			
	Kuching	SEW-EURODRIVE Sdn. Bhd. Lot 268, Section 9 KTLD Lorong 9, Jalan Satok 93400 Kuching, Sarawak East Malaysia	Tel. +60 82 232380 Fax +60 82 242380
	Penang	SEW-EURODRIVE Sdn. Bhd. No. 38, Jalan Bawal Kimsar Garden 13700 Prai, Penang	Tel. +60 4 3999349 Fax +60 4 3999348 seweurodrive@po.jaring.my

Mexico			
Assembly **Sales** **Service**	**Queretaro**	SEW-EURODRIVE MEXIKO SA DE CV SEM-981118-M93 Tequisquiapan No. 102 Parque Industrial Queretaro C.P. 76220 Queretaro, Mexico	Tel. +52 442 1030-300 Fax +52 442 1030-301 http://www.sew-eurodrive.com.mx scmexico@seweurodrive.com.mx

Morocco			
Sales	**Casablanca**	Afit 5, rue Emir Abdelkader MA 20300 Casablanca	Tel. +212 22618372 Fax +212 22618351 ali.alami@premium.net.ma

Netherlands			
Assembly **Sales** **Service**	**Rotterdam**	VECTOR Aandrijftechniek B.V. Industrieweg 175 NL-3044 AS Rotterdam Postbus 10085 NL-3004 AB Rotterdam	Tel. +31 10 4463-700 Fax +31 10 4155-552 http://www.vector.nu info@vector.nu

New Zealand			
Assembly **Sales** **Service**	**Auckland**	SEW-EURODRIVE NEW ZEALAND LTD. P.O. Box 58-428 82 Greenmount drive East Tamaki Auckland	Tel. +64 9 2745627 Fax +64 9 2740165 http://www.sew-eurodrive.co.nz sales@sew-eurodrive.co.nz
	Christchurch	SEW-EURODRIVE NEW ZEALAND LTD. 10 Settlers Crescent, Ferrymead Christchurch	Tel. +64 3 384-6251 Fax +64 3 384-6455 sales@sew-eurodrive.co.nz
Technical Office	**Palmerston North**	SEW-EURODRIVE NEW ZEALAND LTD. C/-Grant Shearman, RD 5, Aronui Road Palmerston North	Tel. +64 6 355-2165 Fax +64 6 355-2316 sales@sew-eurodrive.co.nz

Norway			
Assembly **Sales** **Service**	**Moss**	SEW-EURODRIVE A/S Solgaard skog 71 N-1599 Moss	Tel. +47 69 241-020 Fax +47 69 241-040 http://www.sew-eurodrive.no sew@sew-eurodrive.no

Pakistan			
Technical Office	**Karachi**	SEW-EURODRIVE Pte. Ltd. Karachi Liaison Office A/3, 1st Floor, Central Commercial Area Sultan Ahmed Shah Road Block 7/8, K.C.H.S. Union Ltd., Karachi	Tel. +92 21 4529369 Fax +92 21 4547365 seweurodrive@cyber.net.pk

Peru			
Assembly **Sales** **Service**	**Lima**	SEW DEL PERU MOTORES REDUCTORES S.A.C. Los Calderos, 120-124 Urbanizacion Industrial Vulcano, ATE, Lima	Tel. +51 1 3495280 Fax +51 1 3493002 http://www.sew-eurodrive.com.pe sewperu@sew-eurodrive.com.pe

Philippines			
Technical Office	**Manila**	SEW-EURODRIVE Pte Ltd Manila Liaison Office Suite 110, Ground Floor Comfoods Building Senator Gil Puyat Avenue 1200 Makati City	Tel. +63 2 894275254 Fax +63 2 8942744 sewmla@i-next.net

Poland			
Assembly **Sales** **Service**	**Lodz**	SEW-EURODRIVE Polska Sp.z.o.o. ul. Techniczna 5 PL-92-518 Łódź	Tel. +48 42 67710-90 Fax +48 42 67710-99 http://www.sew-eurodrive.pl sew@sew-eurodrive.pl
Technical Office	**Katowice**	SEW-EURODRIVE Polska Sp.z.o.o. ul. Nad Jeziorem 87 PL-43-100 Tychy	Tel. +48 32 2175026 + 32 2175027 Fax +48 32 2277910
	Bydgoszcz	SEW-EURODRIVE Polska Sp.z.o.o. ul. Fordońska 246 PL-85-959 Bydgoszcz	Tel. +48 52 3606590 Fax +48 52 3606591
	Szczecinek	SEW-EURODRIVE Polska Sp.z.o.o. ul. Mickiewicza 2 pok. 36 PL-78-400 Szczecinek	Tel. +48 94 3728820 Fax +48 94 3728821

Portugal			
Assembly **Sales** **Service**	**Coimbra**	SEW-EURODRIVE, LDA. Apartado 15 P-3050-901 Mealhada	Tel. +351 231 20 9670 Fax +351 231 20 3685 http://www.sew-eurodrive.pt infosew@sew-eurodrive.pt
Technical Offices	**Lisboa**	Tertir Edifício Lisboa Gabinete 119 P-2615 Alverca do Ribatejo	Tel. +351 21 958-0198 Fax +351 21 958-0245 esc.lisboa@sew-eurodrive.pt
	Porto	Av. D. Afonso Henriques, 1196 - 1° - sala 102 Edifício ACIA P- 4450-016 Matosinhos	Tel. +351 229 350 383 Fax +351 229 350 384 MobilTel. +351 9 332559110 esc.porto@sew-eurodrive.pt

Romania			
Sales **Service**	**Bucureşti**	Sialco Trading SRL str. Madrid nr.4 011785 Bucuresti	Tel. +40 21 230-1328 Fax +40 21 230-7170 sialco@sialco.ro

Russia			
Assembly **Sales** **Service**	**St. Petersburg**	ZAO SEW-EURODRIVE P.O. Box 36 195220 St. Petersburg Russia	Tel. +7 812 3332522 +7 812 5357142 Fax +7 812 3332523 http://www.sew-eurodrive.ru sew@sew-eurodrive.ru
Technical Office	**Moskau**	ZAO SEW-EURODRIVE RUS-107023 Moskau	Tel. +7 495 9337090 Fax +7 495 9337094 mso@sew-eurodrive.ru
	Novosibirsk	ZAO SEW-EURODRIVE pr. K Marksa, d.30 RUS-630087 Novosibirsk	Tel. +7 383 3350200 Fax +7 383 3462544 nso@sew-eurodrive.ru
	Togliatti	ZAO SEW-EURODRIVE Sportivnaya Str. 4B, office 2 Samarskaya obl. RUS-445057 Togliatti	Tel. +7 8482 710529 Fax +7 8482 810590

Senegal			
Sales	**Dakar**	SENEMECA Mécanique Générale Km 8, Route de Rufisque B.P. 3251, Dakar	Tel. +221 849 47-70 Fax +221 849 47-71 senemeca@sentoo.sn

Serbia			
Sales	**Beograd**	DIPAR d.o.o. Ustanicka 128a PC Košum, IV floor SCG-11000 Beograd	Tel. +381 11 347 3244 / +381 11 288 0393 Fax +381 11 347 1337 dipar@yubc.net

Singapore			
Assembly **Sales** **Service**	**Singapore**	SEW-EURODRIVE PTE. LTD. No 9, Tuas Drive 2 Jurong Industrial Estate Singapore 638644	Tel. +65 68621701 Fax +65 68612827 http://www.sew-eurodrive.com.sg sewsingapore@sew-eurodrive.com

Slovakia			
Sales	**Bratislava**	SEW-Eurodrive SK s.r.o. Rybničná 40 SK-83554 Bratislava	Tel. +421 2 49595201 Fax +421 2 49595200 sew@sew-eurodrive.sk http://www.sew-eurodrive.sk
	Žilina	SEW-Eurodrive SK s.r.o. ul. Vojtecha Spanyola 33 SK-010 01 Žilina	Tel. +421 41 700 2513 Fax +421 41 700 2514 sew@sew-eurodrive.sk
	Banská Bystrica	SEW-Eurodrive SK s.r.o. Rudlovská cesta 85 SK-97411 Banská Bystrica	Tel. +421 48 414 6564 Fax +421 48 414 6566 sew@sew-eurodrive.sk

Slovenia			
Sales **Service**	**Celje**	Pakman - Pogonska Tehnika d.o.o. UI. XIV. divizije 14 SLO - 3000 Celje	Tel. +386 3 490 83-20 Fax +386 3 490 83-21 pakman@siol.net

South Africa			
Assembly **Sales** **Service**	**Johannesburg**	SEW-EURODRIVE (PROPRIETARY) LIMITED Eurodrive House Cnr. Adcock Ingram and Aerodrome Roads Aeroton Ext. 2 Johannesburg 2013 P.O.Box 90004 Bertsham 2013	Tel. +27 11 248-7000 Fax +27 11 494-3104 http://www.sew.co.za dross@sew.co.za
	Capetown	SEW-EURODRIVE (PROPRIETARY) LIMITED Rainbow Park Cnr. Racecourse & Omuramba Road Montague Gardens Cape Town P.O.Box 36556 Chempet 7442 Cape Town	Tel. +27 21 552-9820 Fax +27 21 552-9830 Telex 576 062 dswanepoel@sew.co.za
	Durban	SEW-EURODRIVE (PROPRIETARY) LIMITED 2 Monaceo Place Pinetown Durban P.O. Box 10433, Ashwood 3605	Tel. +27 31 700-3451 Fax +27 31 700-3847 dtait@sew.co.za
	Nelspruit	SEW-EURODRIVE (PTY) LTD. 7 Christie Crescent Vintonia P.O.Box 1942 Nelspruit 1200	Tel. +27 13 752-8007 Fax +27 13 752-8008 robermeyer@sew.co.za
Technical Offices	**Port Elizabeth**	SEW-EURODRIVE PTY LTD. 5 b Linsay Road Neave Township 6000 Port Elizabeth	Tel. +27 41 453-0303 Fax +27 41 453-0305 dswanepoel@sew.co.za
	Richards BayRichards Bay	SEW-EURODRIVE PTY LTD. 25 Eagle Industrial Park Alton Richards Bay P.O. Box 458 Richards Bay 3900	Tel. +27 35 797-3805 Fax +27 35 797-3819 dtait@sew.co.za

Spain			
Assembly **Sales** **Service**	**Bilbao**	SEW-EURODRIVE ESPAÑA, S.L. Parque Tecnológico, Edificio, 302 E-48170 Zamudio (Vizcaya)	Tel. +34 94 43184-70 Fax +34 94 43184-71 http://www.sew-eurodrive.es sew.spain@sew-eurodrive.es
Technical Offices	**Barcelona**	Delegación Barcelona Avenida Francesc Maciá 40-44 Oficina 3.1 E-08206 Sabadell (Barcelona)	Tel. +34 93 7162200 Fax +34 93 7233007
	Lugo	Delegación Noroeste Apartado, 1003 E-27080 Lugo	Tel. +34 639 403348 Fax +34 982 202934
	Madrid	Delegación Madrid Gran Via. 48-2° A-D E-28220 Majadahonda (Madrid)	Tel. +34 91 6342250 Fax +34 91 6340899

Sri Lanka			
Sales	**Colombo**	SM International (Pte) Ltd 254, Galle Raod Colombo 4, Sri Lanka	Tel. +94 1 2584887 Fax +94 1 2582981

Sweden			
Assembly **Sales** **Service**	**Jönköping**	SEW-EURODRIVE AB Gnejsvägen 6-8 S-55303 Jönköping Box 3100 S-55003 Jönköping	Tel. +46 36 3442-00 Fax +46 36 3442-80 http://www.sew-eurodrive.se info@sew-eurodrive.se
Technical Offices	**Göteborg**	SEW-EURODRIVE AB Gustaf Werners gata 8 S-42131 Västra Frölunda	Tel. +46 31 70968-80 Fax +46 31 70968-93
	Malmö	SEW-EURODRIVE AB Borrgatan 5 S-21124 Malmö	Tel. +46 40 68064-80 Fax +46 40 68064-93
	Stockholm	SEW-EURODRIVE AB Björkholmsvägen 10 S-14125 Huddinge	Tel. +46 8 44986-80 Fax +46 8 44986-93
	Skellefteå	SEW-EURODRIVE AB Trädgårdsgatan 8 S-93131 Skellefteå	Tel. +46 910 7153-80 Fax +46 910 7153-93

Switzerland			
Assembly **Sales** **Service**	**Basel**	Alfred Imhof A.G. Jurastrasse 10 CH-4142 Münchenstein bei Basel	Tel. +41 61 417 1717 Fax +41 61 417 1700 http://www.imhof-sew.ch info@imhof-sew.ch
Technical Offices	**Rhaetian Switzerland**	André Gerber Es Perreyres CH-1436 Chamblon	Tel. +41 24 445 3850 Fax +41 24 445 4887
	Bern / Solothurn	Rudolf Bühler Muntersweg 5 CH-2540 Grenchen	Tel. +41 32 652 2339 Fax +41 32 652 2331
	Central Switzerland and Ticino	Beat Lütolf Baumacher 11 CH-6244 Nebikon	Tel. +41 62 756 4780 Fax +41 62 756 4786
	Zürich	René Rothenbühler Nörgelbach 7 CH-8493 Saland	Tel. +41 52 386 3150 Fax +41 52 386 3213
	Bodensee and East Switzerland	Markus Künzle Eichweg 4 CH-9403 Goldbach	Tel. +41 71 845 2808 Fax +41 71 845 2809

Taiwan (R.O.C.)			
Sales	**Nan Tou**	Ting Shou Trading Co., Ltd. No. 55 Kung Yeh N. Road Industrial District Nan Tou 540	Tel. +886 49 255353 Fax +886 49 257878
	Taipei	Ting Shou Trading Co., Ltd. 6F-3, No. 267, Sec. 2 Tung Hwa South Road, Taipei	Tel. +886 2 27383535 Fax +886 2 27368268 Telex 27 245 sewtwn@ms63.hinet.net

Thailand			
Assembly **Sales** **Service**	**Chonburi**	SEW-EURODRIVE (Thailand) Ltd. 700/456, Moo.7, Donhuaroh Muang Chonburi 20000	Tel. +66 38 454281 Fax +66 38 454288 sewthailand@sew-eurodrive.com
Technical Offices	**Bangkok**	SEW-EURODRIVE (Thailand) Ltd. 6th floor, TPS Building 1023, Phattanakarn Road Suanluang Bangkok,10250	Tel. +66 2 7178149 Fax +66 2 7178152 sewthailand@sew-eurodrive.com
	Hadyai	SEW-EURODRIVE (Thailand) Ltd. Hadyai Country Home Condominium 59/101 Soi.17/1 Rachas-Utid Road. Hadyai, Songkhla 90110	Tel. +66 74 359441 Fax +66 74 359442 sewthailand@sew-eurodrive.com
	Khonkaen	SEW-EURODRIVE (Thailand) Ltd. 4th Floor, Kaow-U-HA MOTOR Bldg, 359/2, Mitraphab Road. Muang District Khonkaen 40000	Tel. +66 43 225745 Fax +66 43 324871 sew-thailand@sew-eurodrive.com

Tunisia			
Sales	**Tunis**	T. M.S. Technic Marketing Service 5, Rue El Houdaibiah 1000 Tunis	Tel. +216 71 4340-64 + 71 4320-29 Fax +216 71 4329-76 tms@tms.com.tn

Turkey			
Assembly **Sales** **Service**	**Istanbul**	SEW-EURODRIVE Hareket Sistemleri San. ve Tic. Ltd. Sti. Bagdat Cad. Koruma Cikmazi No. 3 TR-34846 Maltepe ISTANBUL	Tel. +90 216 4419163 / 164 3838014/15 Fax +90 216 3055867 http://www.sew-eurodrive.com.tr sew@sew-eurodrive.com.tr
Technical Offices	**Ankara**	SEW-EURODRIVE Hareket Sistemleri San. ve Tic. Ltd. Sti. Özcelik Is Merkezi, 14. Sok, No. 4/42 TR-06370 Ostim/Ankara	Tel. +90 312 3853390 / +90 312 3544715 / +90 312 3546109 Fax +90 312 3853258
	Bursa	SEW-EURODRIVE Hareket Sistemleri San. ve Tic. Ltd. Sti. Besevler Küçük Sanayi Parkoop Parçacilar Sitesi 48. Sokak No. 47 TR Nilüfer/Bursa	Tel. +90 224 443 4556 Fax +90 224 443 4558
	Izmir	SEW-EURODRIVE Hareket Sistemleri San. ve Tic. Ltd. Sti. 1203/11 Sok. No. 4/613 Hasan Atli Is Merkezi TR-35110 Yenisehir-Izmir	Tel. +90 232 4696264 Fax +90 232 4336105

Ukraine			
Sales **Service**	**Dnepropetrovsk**	SEW-EURODRIVE Str. Rabochaja 23-B, Office 409 49008 Dnepropetrovsk	Tel. +380 56 370 3211 Fax +380 56 372 2078 http://www.sew-eurodrive.ua sew@sew-eurodrive.ua
Sales	**Kiev**	SEW-EURODRIVE GmbH S. Oleynika str. 21 02068 Kiev	Tel. +380 44 503 95 77 Fax +380 44 503 95 78 kso@sew-eurodrive.ua

Uruguay			
Sales	**Montevideo**	SEW-EURODRIVE Uruguay, S. A. German Barbato 1526 CP 11200 Montevideo	Tel. +598 2 90181-89 Fax +598 2 90181-88 sewuy@sew-eurodrive.com.uy

USA			
Production **Assembly** **Sales** **Service**	**Greenville**	SEW-EURODRIVE INC. 1295 Old Spartanburg Highway P.O. Box 518 Lyman, S.C. 29365	Tel. +1 864 439-7537 Fax Sales +1 864 439-7830 Fax Manuf. +1 864 439-9948 Fax Ass. +1 864 439-0566 Telex 805 550 http://www.seweurodrive.com cslyman@seweurodrive.com
Assembly **Sales** **Service**	**San Francisco**	SEW-EURODRIVE INC. 30599 San Antonio St. Hayward, California 94544-7101	Tel. +1 510 487-3560 Fax +1 510 487-6381 cshayward@seweurodrive.com
	Philadelphia/PA	SEW-EURODRIVE INC. Pureland Ind. Complex 2107 High Hill Road, P.O. Box 481 Bridgeport, New Jersey 08014	Tel. +1 856 467-2277 Fax +1 856 845-3179 csbridgeport@seweurodrive.com
	Dayton	SEW-EURODRIVE INC. 2001 West Main Street Troy, Ohio 45373	Tel. +1 937 335-0036 Fax +1 937 440-3799 cstroy@seweurodrive.com
	Dallas	SEW-EURODRIVE INC. 3950 Platinum Way Dallas, Texas 75237	Tel. +1 214 330-4824 Fax +1 214 330-4724 csdallas@seweurodrive.com
	Additional addresses for service in the USA provided on request!		

Venezuela			
Assembly **Sales** **Service**	**Valencia**	SEW-EURODRIVE Venezuela S.A. Av. Norte Sur No. 3, Galpon 84-319 Zona Industrial Municipal Norte Valencia, Estado Carabobo	Tel. +58 241 832-9804 Fax +58 241 838-6275 http://www.sew-eurodrive.com.ve sewventas@cantv.net sewfinanzas@cantv.net

Startup: Brief description

The frequency inverter MOVITRAC® B can be connected directly to a motor of the same power. For example: A 1.5 kW motor can be connected directly to a MC07B0015.

Procedure

1. Connect the motor to the MOVITRAC® B (terminal X2).
2. You have the option of connecting a braking resistor (terminal X2).
3. The following signal terminals must be controlled with your control system:
   - Enable DI03
   - As required: CW/STOP DI01 or CCW/STOP DI02
   - Setpoint:
     – Analog input X10 and/or
     – DI04 = n11 = 150 rpm and/or
     – DI05 = n12 = 750 rpm and/or
     – DI04 + DI05 = n13 = 1500 rpm
   - For brake motors: DO02 = brake control system using brake rectifiers
4. You have the option of connecting the following signal terminals:
   - DI00 = error reset
   - DO01 = /malfunction (designed as a relay contact)
   - DO03 = ready
5. Check the controller for required functionality.
6. Connect the frequency inverter to the mains (X1).

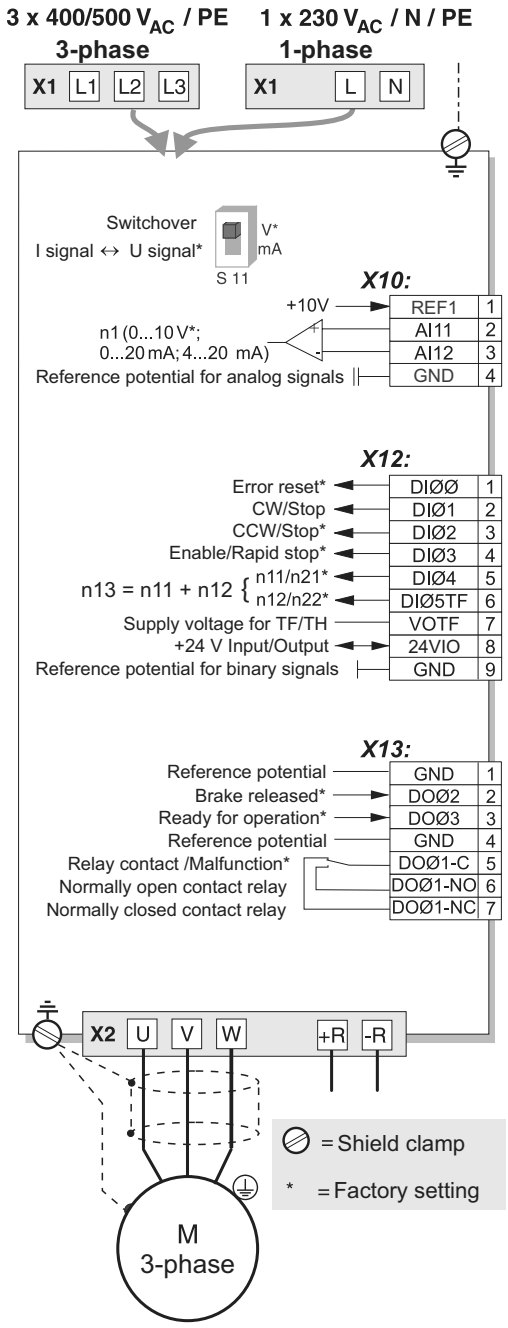

Notes

Signal terminal functions and setpoint settings can be modified using the FBG11B keypad or a PC. A PC connection requires the FSC11B front option or one of the following interface adapters: UWS21A / UWS11A / USB11A.

The MOVITRAC® B frequency inverter should only be operated in strict observance of the detailed operating instructions!

How we're driving the world

With people who think fast and develop the future with you.

With a worldwide service network that is always close at hand.

With drives and controls that automatically improve your productivity.

With comprehensive knowledge in virtually every branch of industry today.

With uncompromising quality that reduces the cost and complexity of daily operations.

SEW-EURODRIVE
Driving the world

With a global presence that offers responsive and reliable solutions. Anywhere.

With innovative technology that solves tomorrow's problems today.

With online information and software updates, via the Internet, available around the clock.

SEW-EURODRIVE GmbH & Co KG
P.O. Box 3023 · D-76642 Bruchsal / Germany
Phone +49 7251 75-0 · Fax +49 7251 75-1970
sew@sew-eurodrive.com

→ **www.sew-eurodrive.com**